Service Manual

PIONEER®
The Art of Entertainment

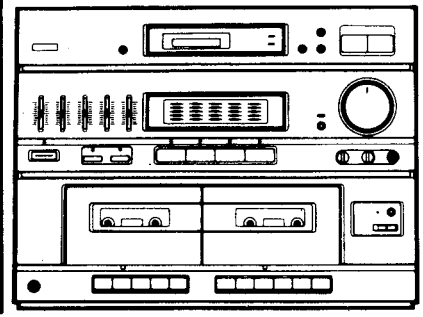

ORDER NO.
ARP2467

STEREO DOUBLE CASSETTE DECK RECEIVER

RX-Z35
RX-Z45

RX-Z35 AND RX-Z45 HAVE THE FOLLOWING :

Type	Model		Power Requirement	Remarks
	RX-Z35	RX-Z45		
SDXJ	○	—	AC110V, 120V-127V, 220V, 240V (Switchable)	
YPWXJ	○	—	AC240V only	
HEXJ	—	○	AC220V-230V, 240V (Switchable)*	

* Change the connection of the power transformer's primary wirir

- **This manual is applicable to the following : RX-Z35/SDXJ and YPWXJ ; RX-Z45/HEXJ.**
- **For the following : RX-Z35/YPWXJ ; RX-Z45/HEXJ, refer to page 74-107.**
- **Ce manuel pour le service comprend les explications de réglage en français.**
- **Este manual de servicio trata del método ajuste escrito en español.**

CONTENTS

1. EXPLODED VIEWS, PACKING AND PARTS LIST ··· 2
2. SCHEMATIC AND PCB CONNECTIONS DIAGRAMS ··· 12
3. PCB PARTS LIST ··· 47
4. ADJUSTMENTS ··· 53
4. REGLAGE ··· 59
4. AJUSTE ··· 65
5. IC INFORMATION ··· 71
6. FOR RX-Z35/YPWXJ AND RX-Z45/HEXJ TYPES ··· 74
7. PANEL FACILITIES ··· 108
8. SPECIFICATIONS ··· 113

PIONEER ELECTRONIC CORPORATION 4-1, Meguro 1-Chome, Meguro-ku, Tokyo 153, Japan
PIONEER ELECTRONICS SERVICE INC. P.O. Box 1760, Long Beach, California 90801 U.S.A.
PIONEER ELECTRONICS OF CANADA, INC. 300 Allstate Parkway Markham, Ontario L3R 0P2 Canada
PIONEER ELECTRONIC [EUROPE] N.V. Haven 1087 Keetberglaan 1, 9120 Melsele, Belgium
PIONEER ELECTRONICS AUSTRALIA PTY. LTD. 178-184 Boundary Road, Braeside, Victoria 3195, Australia TEL: [03] 580-9911

© PIONEER ELECTRONIC CORPORATION 1992

DFV MAR. 1992 Printed in Japan

1. EXPLODED VIEWS, PACKING AND PARTS LIST

NOTES:

- *Parts marked by "NSP" are generally unavailable because they are not in our Master Spare Parts List.*
- *The ⚠ mark found on some component parts indicates the importance of the safety factor of the part. Therefore, when replacing, be sure to use parts of identical designation.*
- *Parts marked by "◉" are not always kept in stock. Their delivery time may be longer than usual or they may be unavailable.*

1.1 PACKING

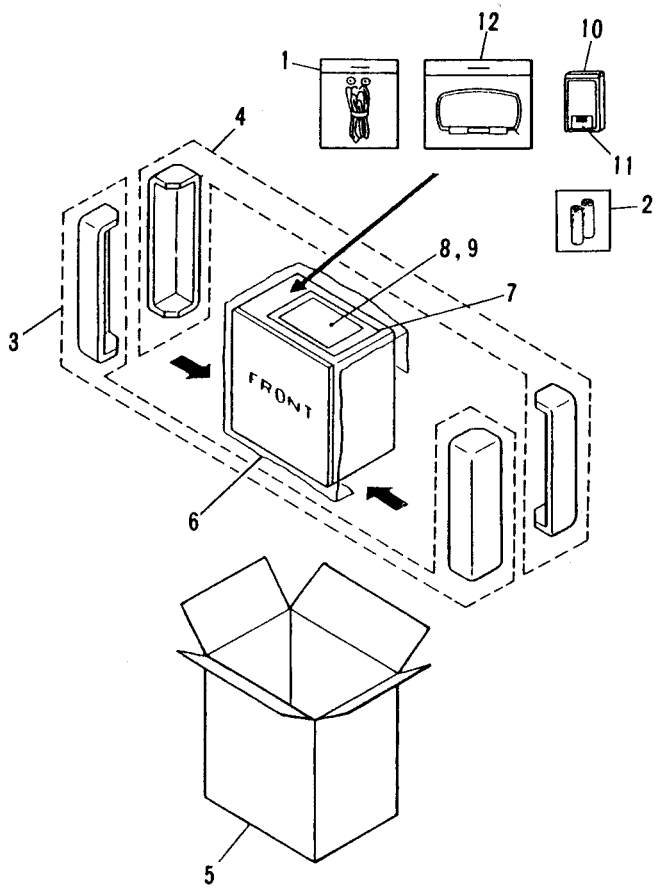

Parts list of Packing

Mark	No.	Description	Parts No.
	1	FM ANTENNA	ADH1008
NSP	2	DRY CELL BATTERY (R03, AAA)	AEX-021
	3	FRONT PAD	AHA1474
	4	REAR PAD A	AHA1475
	5	PACKING CASE	AHD2209
NSP	6	SHEET	AHG1086
NSP	7	BAG	AHG1105
	8	OPE. INSTRUCTIONS (English)	ARB1350
	9	OPE. INSTRUCTIONS (Spanish)	ARC1322
	10	REMOTE CONTROL UNIT (CU-RX011)	AXD1257
	11	BATTERY COVER	AZA1361
	12	LOOP ANTENNA	ATB1006

1.2 EXTERIOR

Parts list of Exterior

Mark	No.	Description	Parts No.
	1	VOLUME KNOB	AAB1264
	2	MIXING KNOB (MIC LEVEL)	AAB1265
	3	TUNER PANEL	AAK2238
	4	AMP. PANEL	AAK2239
	5	INDICATOR PANEL	AAK2240
	6	DOOR PANEL	AAK2241
	7	REMOTE FILTER	AAK2245
	8	CASSETTE DOOR (L)	AAN1302
	9	CASSETTE DOOR (R)	AAN1303
	10	LABEL (PAPER)	AAX1301
NSP	11	VOLUME ASSEMBLY	AWZ3829
◉	12	TUNER ASSEMBLY	AWZ3835
	13	SCREW (STEEL)	ABA1095
	14	SPRING	ABH1078
	15	KEEP PLATE	ABK1017
⚠	16	AC POWER CORD	ADG1051
NSP	17	NYLON BINDER	AEC-093
NSP	18	BINDER	AEC-826
	19	LEG ASS'Y	AEC-847
	20	STRAIN RELIEF	AEC-882
NSP	21	PCB SPACER	AEC1100
NSP	22	NYLON BINDER	AEC1384
NSP	23	CHASSIS	ANA1162
	24	REAR PANEL	ANC1837
	25	BONNET CASE	ANE1346
NSP	26	JACK HOLDER	ANG1613
NSP	27	ASSEMBLY HOLDER	ANG1614
NSP	28	RADIATOR HOLDER	ANG1615
NSP	29	RADIATOR	ANH1357
◉	30	DOLBY ASSEMBLY	AWZ3967
◉	31	POWER ASSEMBLY	AWZ3832
	32	SCREW	BBZ30P080FZK
	33	SCREW	BPZ26P080FMC
	34	NUT	NK90FUC
	35	SCREW	BBZ30P060FMC

Mark	No.	Description	Parts No.
	36	SCREW	BBZ30P060FZK
	37	SCREW	VPZ30P080FMC
	38	SCREW	BPZ30P100FZK
⚠	39	FUSE (T800mA/250V, FU601)	AEK-507
⚠	40	FUSE (T800mA/250V, FU602)	AEK-507
⚠	41	FUSE (T500mA/250V, FU603)	AEK-505
⚠	42	FUSE (T800mA/250V, FU604)	AEK-507
⚠	43	VOLTAGE SELECTOR (S1)	AKX-507
⚠	44	POWER TRANSFORMER (T1)	ATS1389
NSP	45	TRANSE ASSEMBLY	AWZ3863
	46	SCREW	ABA1153

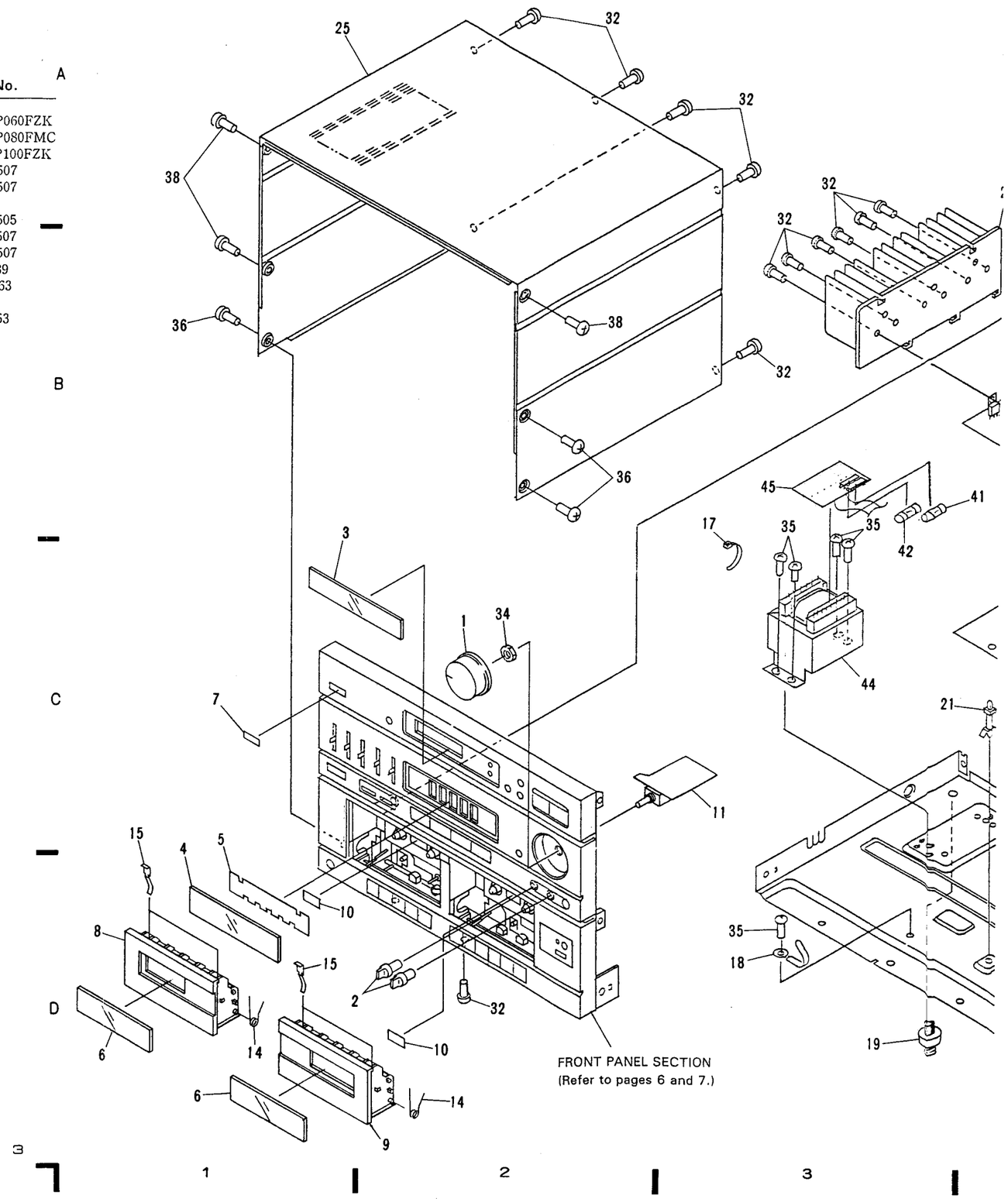

	Parts No.
	BBZ30P060FZK
	VPZ30P080FMC
	BPZ30P100FZK
01)	AEK–507
02)	AEK–507
03)	AEK–505
04)	AEK–507
	AKX–507
T1)	ATS1389
	AWZ3863
	ABA1153

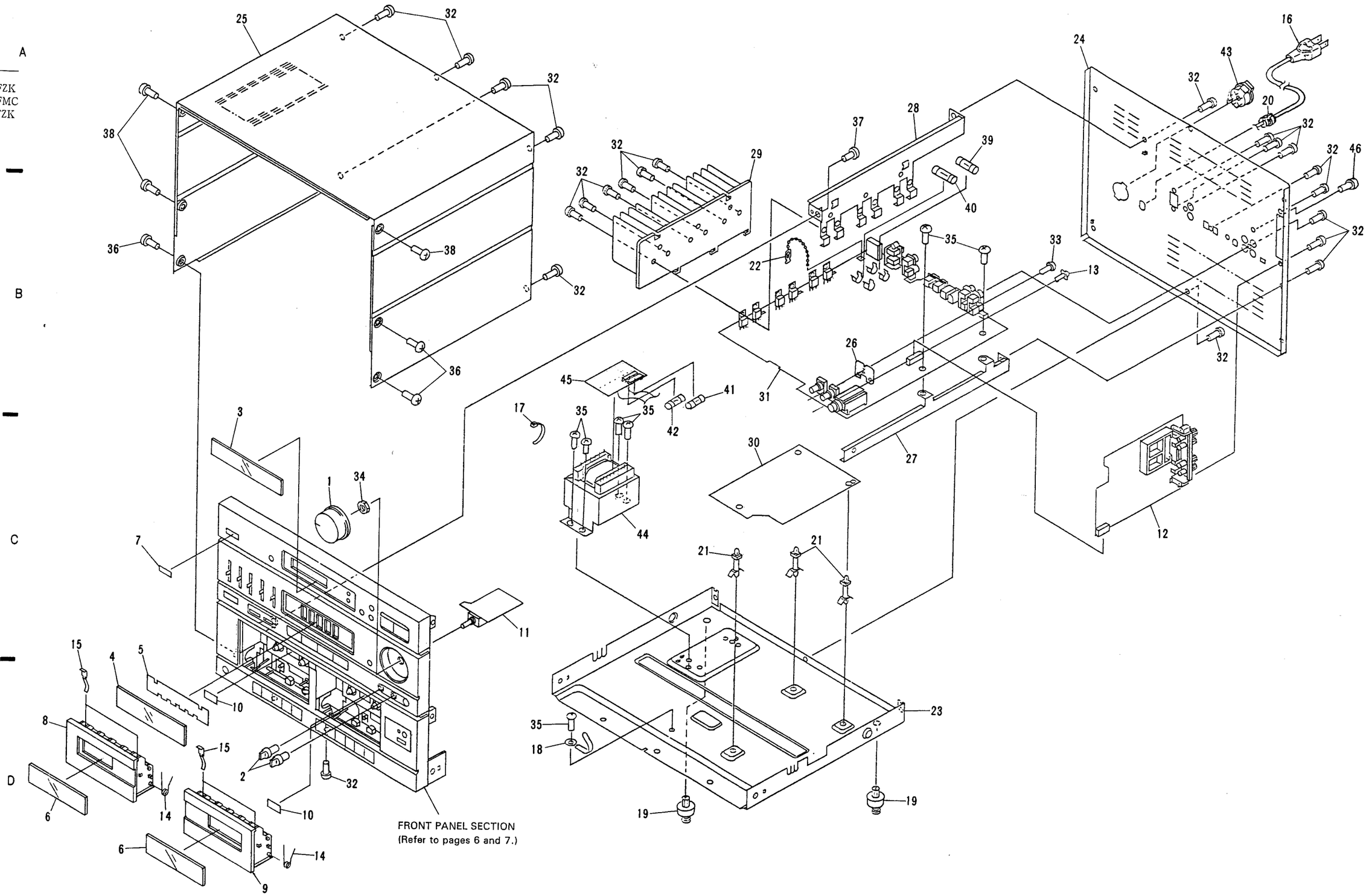

1.3 FRONT PANEL SECTION

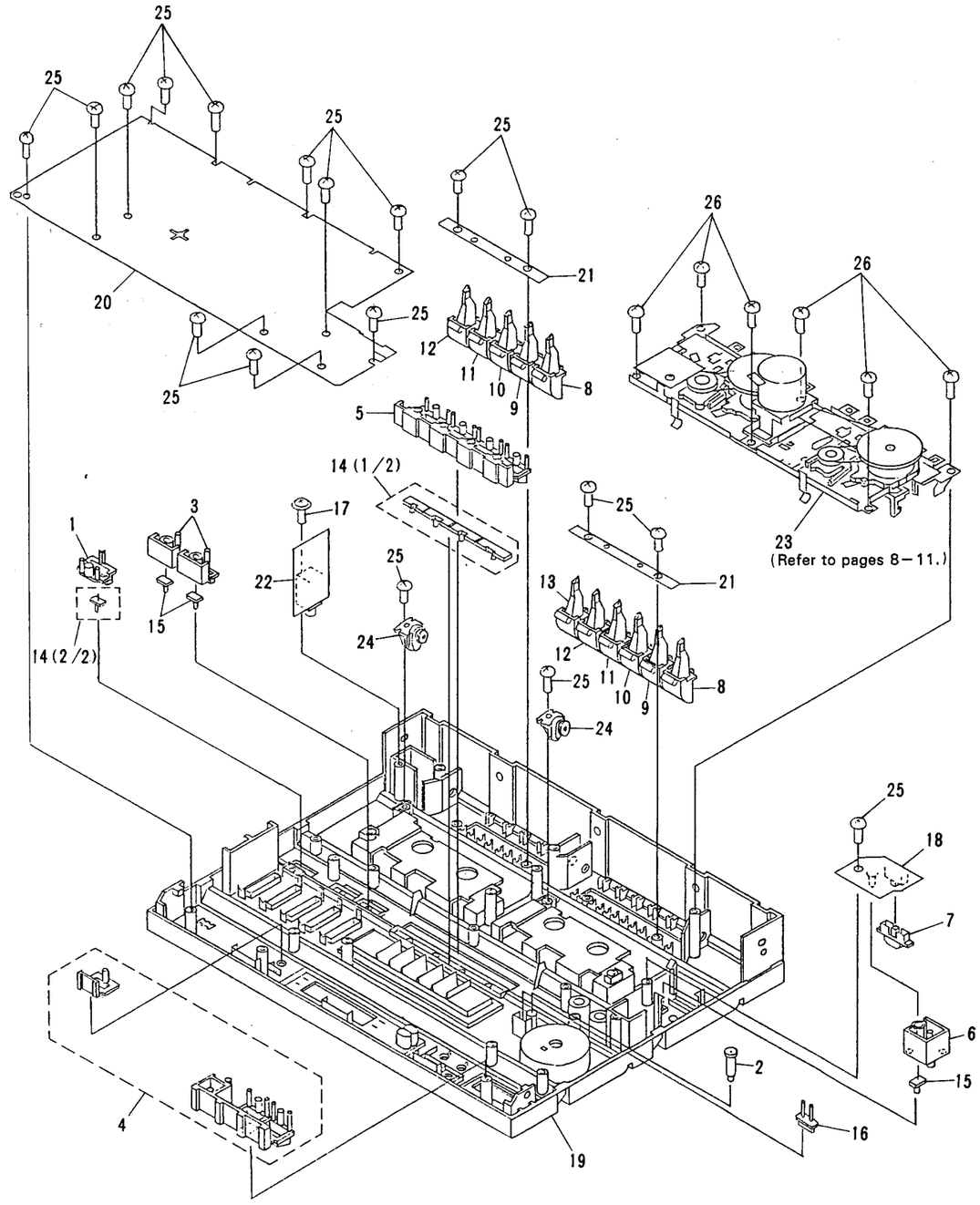

Parts list of Front panel section

Mark	No.	Description	Parts No.
	1	POWER BUTTON (STANDBY/ON)	AAD2123
	2	SURROUND BUTTON (SURROUND & STEREO WIDE)	AAD2124
	3	P. BASS BUTTON (SUPER BASS, VOCAL CANCEL)	AAD2125
	4	TUNING BUTTON	AAD2126
	5	FUNCTION BUTTON	AAD2127
	6	COPY BUTTON (HIGH-SPEED COPY)	AAD2128
	7	DOLBY KNOB (DOLBY NR)	AAE1142
	8	DECK KNOB A (❚❚)	AAE1143
	9	DECK KNOB B (■/⏏)	AAE1144
	10	DECK KNOB C (►►)	AAE1145
	11	DECK KNOB D (◄◄)	AAE1151
	12	DECK KNOB E (►)	AAE1152
	13	DECK KNOB F (●)	AAE1153
	14	FUNCTION LENS	AAK2242
	15	P. BASS LENS	AAK2243
	16	SURROUND LENS	AAK2244
	17	SCREW (STEEL)	ABA1095
NSP	18	SWITCH ASSEMBLY	AWZ3836
	19	FRONT PANEL	AMB1947
◉	20	DISPLAY ASSEMBLY	AWZ3837
NSP	21	DECK KNOB HOLDER	ANG1616
NSP	22	HEADPHONE ASSEMBLY	AWZ3834
	23	CASSETTE MECHA UNIT	AWY1174
	24	DAMPER ASSY	AXA1008
	25	SCREW	BPZ26P080FMC
	26	SCREW	VPZ30P080FMC

1.4 CASS

Parts list

Mark	No.
	1
	2
	3
	4
	5
	6
	7
	8
	9
	10
	11
	12
	13
	14
	15
	16
	17
	18
	19
	20
	21
	22
	23
	24
	25
	26
	27
	28
	29
	30
	31
	32
	33
	34
	35
	36
	37
	38
	39
	40
	41
	42
	43
	44
	45
	46
	47
	48
	49
	50
	51
	52
	53
	54
	55
	56

Parts list of Front panel section

Mark	No.	Description	Parts No.
	1	POWER BUTTON (STANDBY/ON)	AAD2123
	2	SURROUND BUTTON (SURROUND & STEREO WIDE)	AAD2124
	3	P. BASS BUTTON (SUPER BASS, VOCAL CANCEL)	AAD2125
	4	TUNING BUTTON	AAD2126
	5	FUNCTION BUTTON	AAD2127
	6	COPY BUTTON (HIGH-SPEED COPY)	AAD2128
	7	DOLBY KNOB (DOLBY NR)	AAE1142
	8	DECK KNOB A (❚❚)	AAE1143
	9	DECK KNOB B (■/⏏)	AAE1144
	10	DECK KNOB C (►►)	AAE1145
	11	DECK KNOB D (◄◄)	AAE1151
	12	DECK KNOB E (►)	AAE1152
	13	DECK KNOB F (●)	AAE1153
	14	FUNCTION LENS	AAK2242
	15	P. BASS LENS	AAK2243
	16	SURROUND LENS	AAK2244
	17	SCREW (STEEL)	ABA1095
NSP	18	SWITCH ASSEMBLY	AWZ3836
	19	FRONT PANEL	AMB1947
◉	20	DISPLAY ASSEMBLY	AWZ3837
NSP	21	DECK KNOB HOLDER	ANG1616
NSP	22	HEADPHONE ASSEMBLY	AWZ3834
	23	CASSETTE MECHA UNIT	AWY1174
	24	DAMPER ASSY	AXA1008
	25	SCREW	BPZ26P080FMC
	26	SCREW	VPZ30P080FMC

1.4 CASSETTE MECHA UNIT

Parts list

Mark	No.	Description	Parts No.
	1	SPRING	AZB1336
	2	SPRING	AZB1337
	3	SPRING	AZB1338
	4	SPRING	AZB1339
	5	SPRING	AZB1340
	6	CASSETTE SPRING	AZB1343
	7	SPRING	AZB1344
	8	SPRING	AZB1346
	9	SPRING	AZB1347
	10	SPRING	AZB1348
	11	PLATE SPRING	AZB1349
	12	WASHER	AZB1350
	13	WASHER	AZB1351
	14	SPRING	AZB1352
	15	SPRING	AZB1353
	16	EARTH LUG	AZB1354
	17	SCREW	AZB1355
	18	SCREW	AZB1356
	19	SCREW	AZB1357
	20	SCREW	AZB1358
	21	SCREW	AZB1359
	22	SCREW	AZB1360
	23	SCREW	AZB1361
	24	SCREW	AZB1362
	25	SCREW	AZB1363
	26	SCREW	AZB1364
	27	PC BOARD	AZN2111
	28	FRAM ASSY	AZN2113
	29	FUNCTION PLATE	AZN2116
	30	REC STOPPER	AZN2117
	31	SW LEVER	AZN2118
	32	REC LEVER	AZN2119
	33	PLAY LEVER	AZN2120
	34	REW LEVER	AZN2121
	35	FF LEVER	AZN2122
	36	SE LEVER	AZN2123
	37	PAUSE LEVER	AZN2124
	38	PAUSE ARM	AZN2125
	39	BELT	AZN2126
	40	BELT	AZN2127
	41	P IDLER ARM	AZN2128
	42	PL IDLER	AZN2129
	43	INTER LOCK	AZN2138
	44	EJECT LEVER	AZN2139
	45	PF FF IDLER ASSY	AZN2140
	46	SENSER	AZN2148
	47	AS BASE	AZN2149
	48	CAM GEAR	AZN2150
	49	SENSER LEVER	AZN2151
	50	CONTROL LEVER	AZN2152
	51	FW ASSY	AZN2153
	52	PINCH ARM	AZN2157
	53	PINCH ROLLER	AZN2158
	54	HEAD BASE	AZN2159
	55	HEAD HOLDER	AZN2160
	56	SWITCH PLATE	AZN2162
	57	BUTTON R HOLDER	AZN2163
	58	BUTTON L HOLDER	AZN2164
	59	P HOLDER	AZN2165
	60	CONNECT PLATE	AZN2166
	61	CONNECT ARM	AZN2167
	62	RELEASE ARM	AZN2168
	63	MOTOR HOLDER	AZN2169
	64	BASE SPI ASSY	AZN2171
	65	TAPE GUIDE	AZN2174
	66	E HEAD	AZP1025
	67	R/P HEAD	AZP1036
	68	MOTOR ASSY	AZX1037
	69	SWITCH (S2)	ASX1014
	70	CASSETTE MECHA	AWY1150
	71	2P WIRE ASSY A (J4)	ADD1104
	72	2P WIRE ASSY B (J5)	ADD1105
	73	2P WIRE ASSY C (J7)	ADD1106
	74	4P JUMPER WIRE (J8)	ADD1107
	75	2P WIRE ASSY D (J3)	ADD1108
	76	2P WIRE ASSY E (J6)	ADD1109
	77	3P HEAD WIRE ASSY (J1)	ADX1613
	78	5P HEAD WIRE ASSY (J2)	ADX1614
	79	SWITCH (S1)	ASX1014
	80	SWITCH (S3)	ASX1014
	81	CERAMIC CAPACITOR (C1)	CKDYF223Z50
	82	SWITCH (S4)	ASX1014
	83	SWITCH (S5)	ASX1014
NSP	101	SPRING	AZB1341
NSP	102	SPRING	AZB1342
NSP	103	SPRING	AZB1345
NSP	104	CHASSIS	AZN2112
NSP	105	FRAM	AZN2114
NSP	106	METAL	AZN2115
NSP	107	SPINDLE BASE	AZN2130
NSP	108	T REEL ASSY	AZN2131
NSP	109	REEL CAP	AZN2132
NSP	110	REEL GEAR	AZN2133
NSP	111	FELT	AZN2134
NSP	112	T REEL	AZN2135
NSP	113	S REEL	AZN2136
NSP	114	FF IDLER	AZN2137
NSP	115	IDLER BASE	AZN2141
NSP	116	PF IDLER	AZN2142
NSP	117	PF PULLY HOLDER	AZN2143
NSP	118	PF PULLY	AZN2144
NSP	119	PF BUSH	AZN2145
NSP	120	SHAFT	AZN2146
NSP	121	FELT	AZN2147
NSP	122	FLY WHEEL	AZN2154
NSP	123	RING	AZN2155
NSP	124	CAPSTAN SHAFT	AZN2156
NSP	125	MOTOR PULLEY	AZN2170
NSP	126	MOTOR	AZX1038
NSP	127	NYLON BINDER	AEC−093
NSP	128	JUMPER CONNECTOR (7PL)	KPD7L

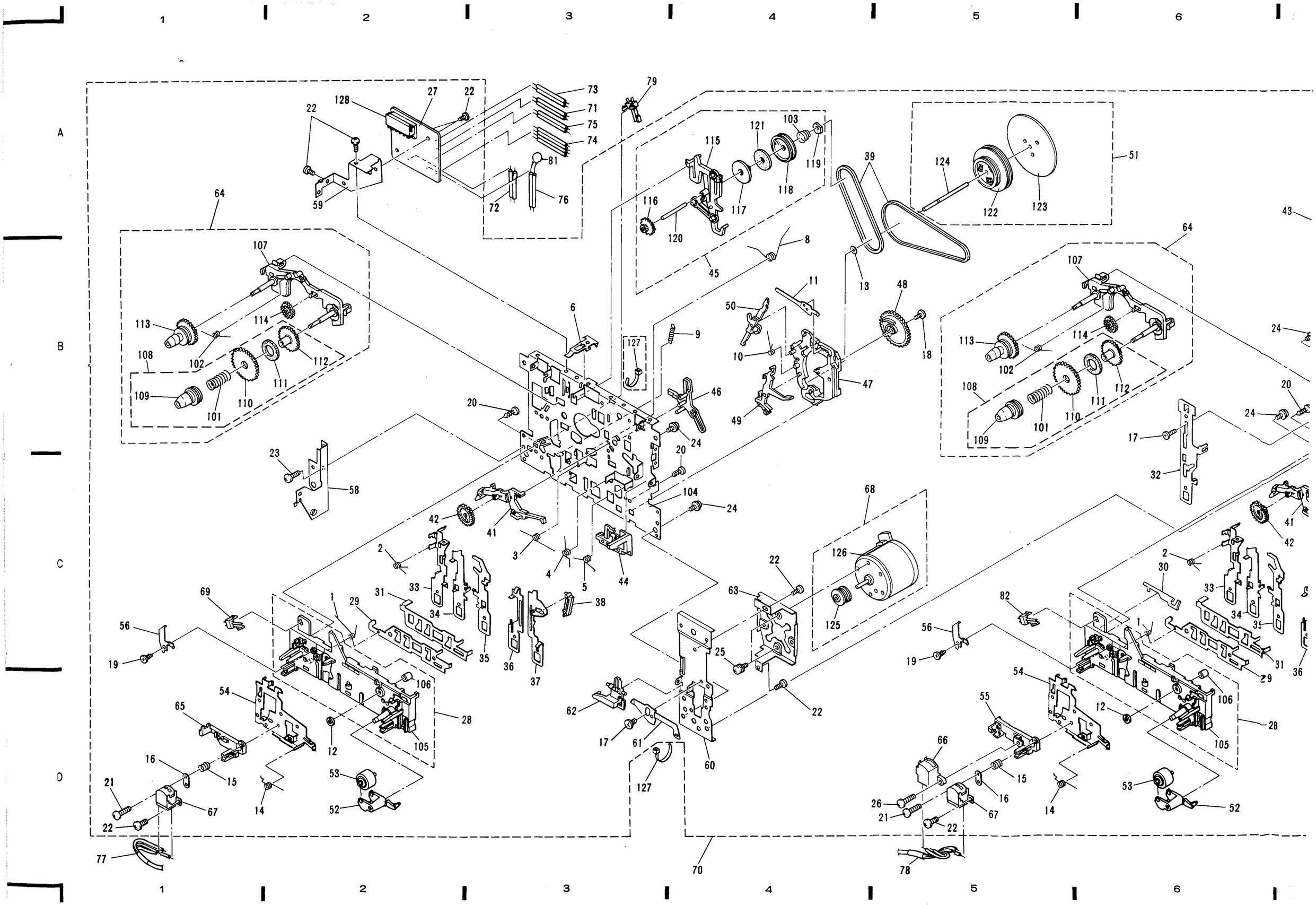

1
2
3
4
5
6
A
B
C
D
128
27
22
73
71
75
74
79
81
72
76
59
64
107
113
114
108
102
112
111
109
110
101
6
127
9
20
23
58
42
41
3
4
5
44
2
33
34
35
31
29
1
69
56
19
54
65
16
15
21
22
67
77
14
53
52
106
105
28
12
36
37
38
62
17
61
60
127
70
115
121
103
119
118
117
116
120
45
8
39
124
122
123
51
13
11
50
10
49
47
48
18
46
24
104
68
126
125
63
25
22
82
30
55
66
26
78
43

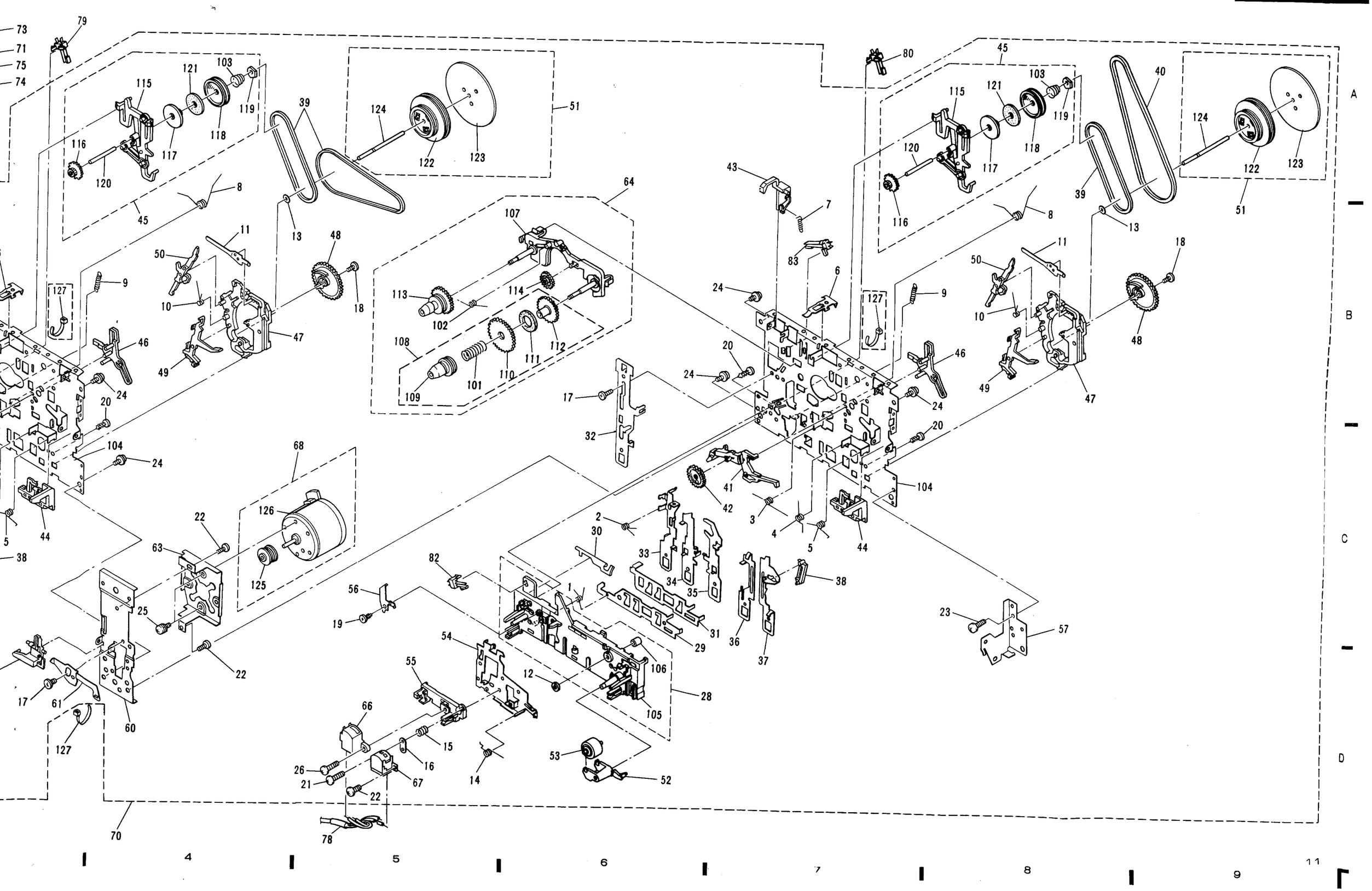

73
71
75
74
79
115
121
103
119
118
117
116
120
45
8
39
124
122
123
51
13
11
50
10
48
18
127
9
46
47
49
24
20
104
44
5
38
64
107
113
114
102
108
109
101
110
111
112
17
32
68
126
125
22
63
25
60
61
127
70
82
56
19
54
55
66
15
16
26
21
67
14
78
53
52
12
106
105
28
1
2
30
33
34
35
31
29
36
37
38
41
42
3
4
5
43
7
83
6
80
40
23
57

2. SCHEMATIC AND PCB CONNECTIONS DIAGRAMS

2.1 OVERALL SCHEMATIC DIAGRAM

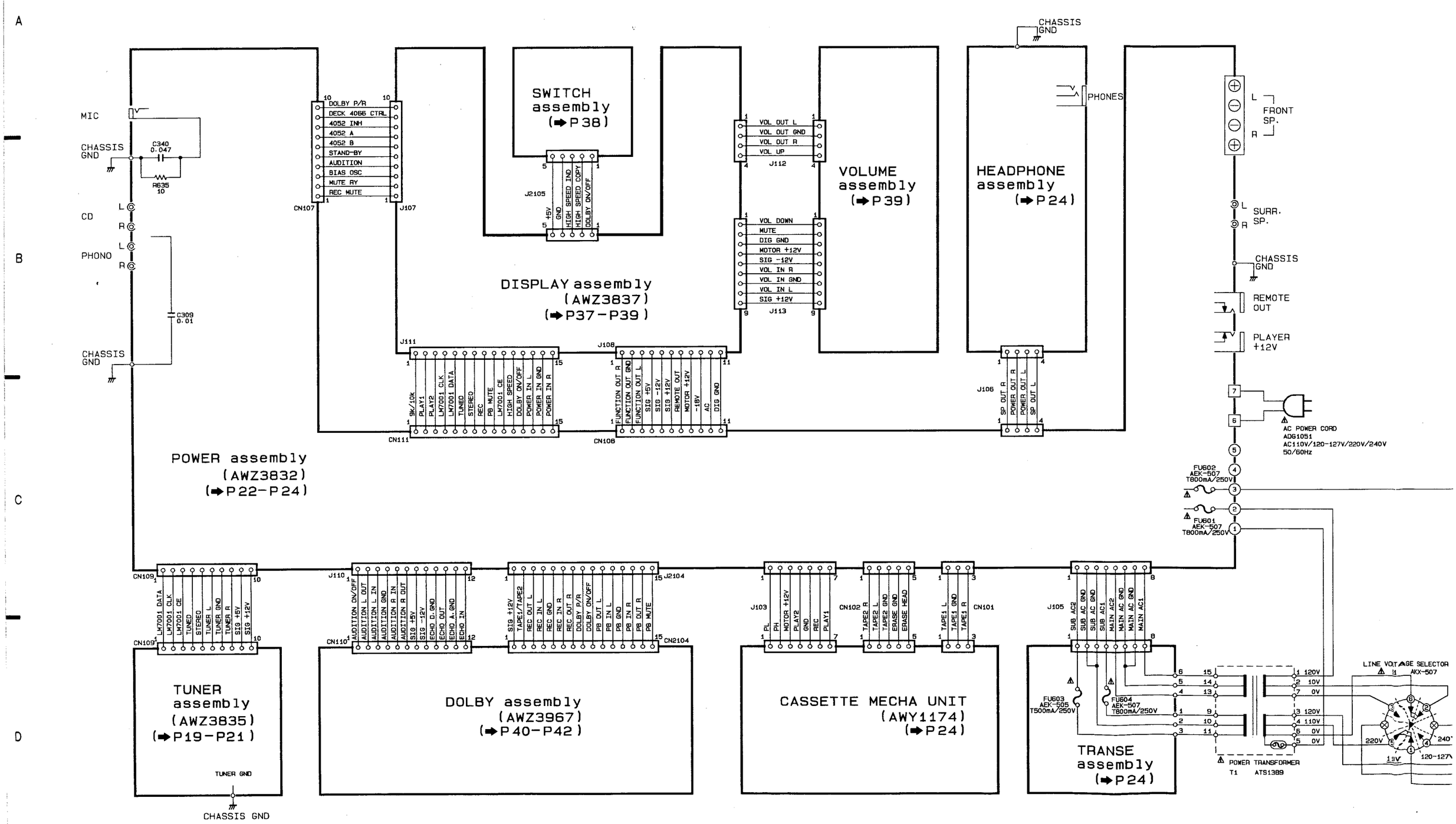

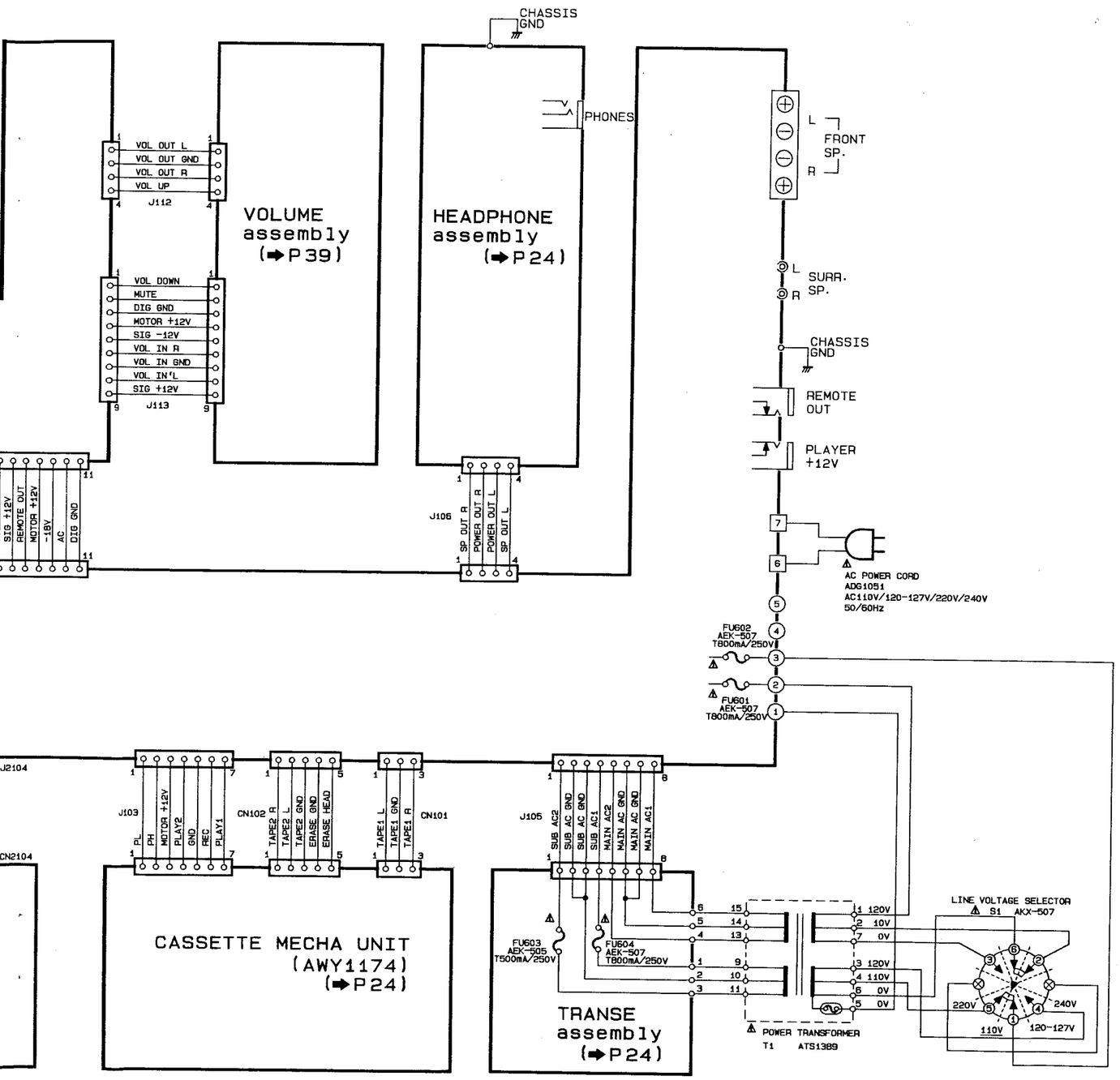

1. RESISTORS:
   Indicated in Ω, ¼W, ⅛W, ±5% tolerance unless otherwise noted k : kΩ, M : MΩ, (F) : ±1%, (G) : ±2%, (K) : ±10% (M); ±20% tolerance

2. CAPACITORS:
   Indicated in capacity (μF)/voltage (V) unless otherwise noted p : pF
   Indication without voltage is 50V except electrolytic capacitor.

3. VOLTAGE, CURRENT:
   [V] : Signal voltage at rated output.
   [ ] : DC voltage (V) at no input signal
   Value in ( ) is DC voltage at rated power.
   ⇦ mA : DC current at no input signal
   mV : Signal voltage at FM 1kHz ±75kHz DEV.

4. OTHERS:
   ➡ : Signal route.
   ⊘ : Adjusting point.
   The ⚠ mark found on some component parts indicates the importance of the safety factor of the part. Therefore, when replacing, be sure to use parts of identical designation.
   ※ marked capacitors and resistors have parts numbers.
   ▼ (RED) : Measurement point
   This is the basic schematic diagram, but the actual circuit may vary due to improvements in design.

5. SWITCHES (The underline indicates the switch position)

S1	VOLTAGE SELECTOR AC110V/120−127V/220V/240V

POWER assembly

S201	CHANNEL STEP (9k/10k)

SWITCH assembly

S2061	HIGH-SPEED COPY
S2062	DOLBY NR ON/OFF

DISPLAY assembly

S51	TAPE
S53	ST. CALL
S54	SURROUND & STEREO WIDE
S55	TUNING (UP)
S56	POWER/STANDBY
S57	MEMORY
S58	TUNER
S59	PHONO
S60	TUNING (DOWN)
S61	CD
S62	BAND
S64	FM MONO
S65	VOCAL CANCEL
S2063	SUPER BASS

2.2 TUNER ASSEMBLY

This P. C. B. connection diagram is viewed from the foil side.

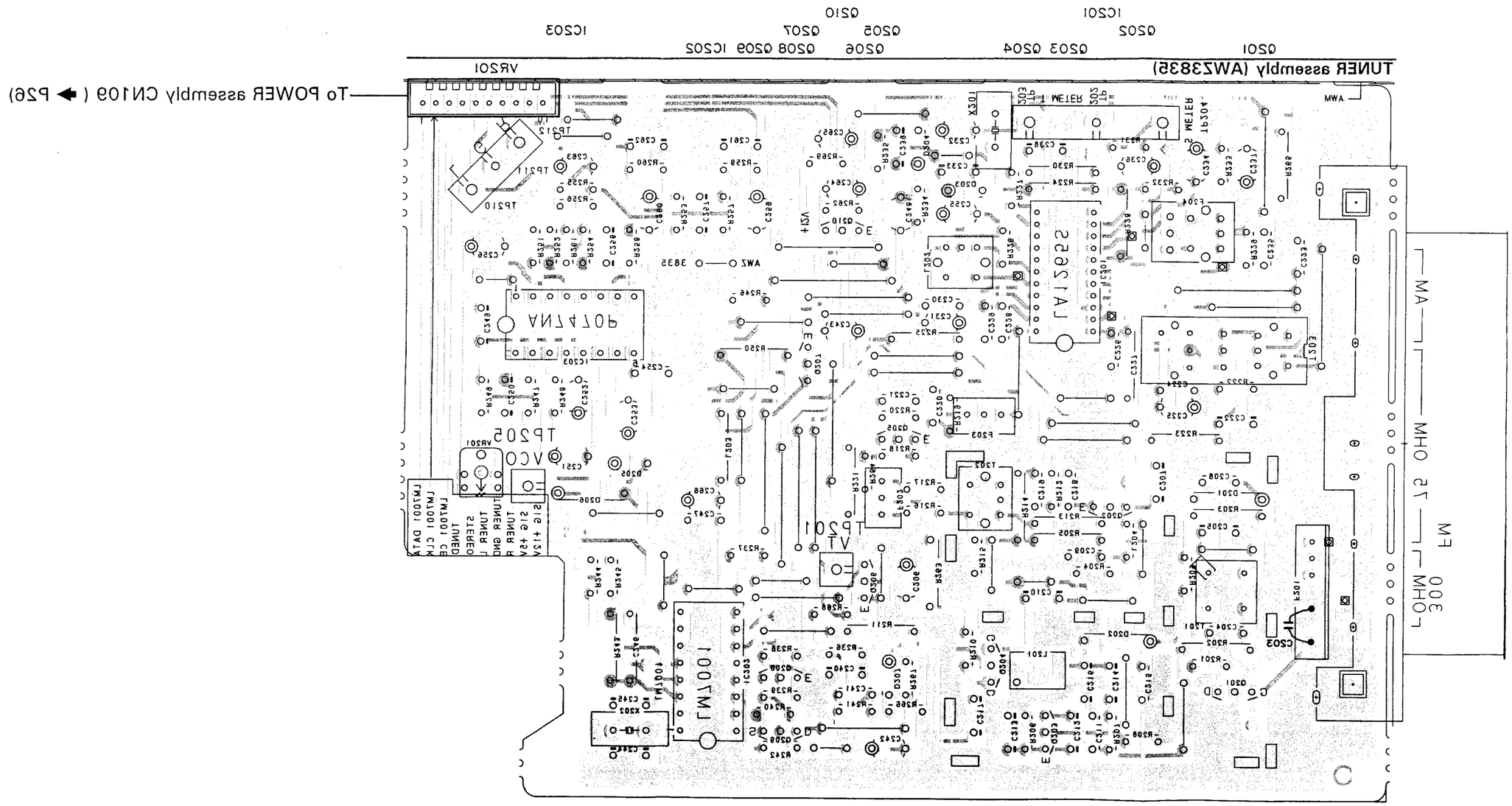

This P. C. B connection diagram is viewed from the parts mounted side.

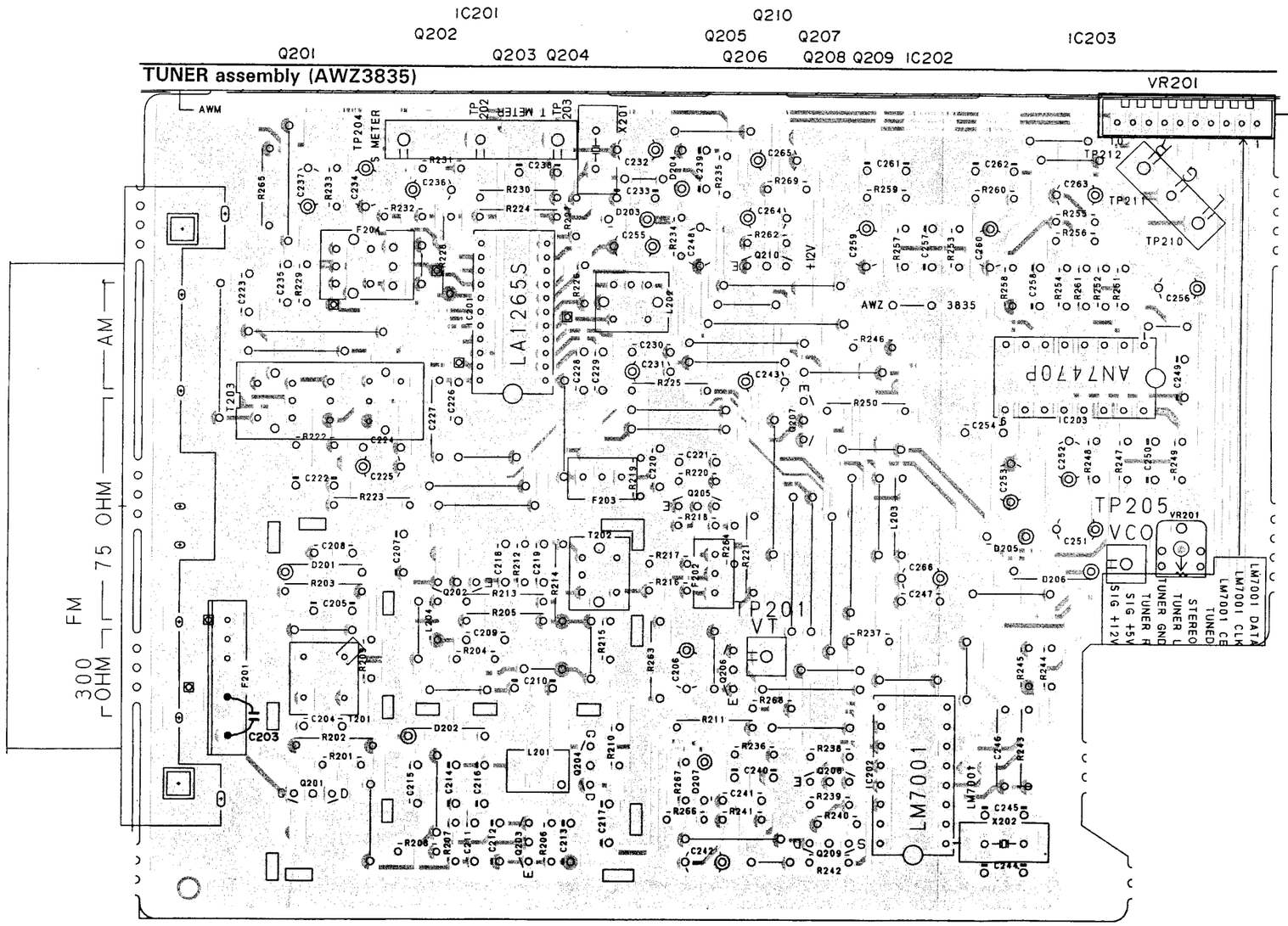

NOTE

1. This P.C.B connection diagram is viewed from the parts mounted side.
2. The parts which have been mounted on the board can be replaced with those shown with the corresponding wiring symbols listed in the following Table.

P.C.B. pattern diagram indication	Corresponding part symbol	Part Name
Q504 (E)	E or E	Transistor
Q215	or	Radiator type transistor
D203	D203	Diode
R237	R237	Resistor
C513	+	Capacitor (Polarized)
C518		Capacitor (Non-polarized)

Others

P.C.B. pattern diagram indication	Part Name
IC	IC
S	Switch
RY	Relay
L	Coil
F	Filter
VR	Variable resistor or Semi-fixed resistor

3. The capactor terminal marked with ◎(double circles) shows negatine terminal.
4. The diode terminal marked with ◎(double circles) shows cathode side.
5. The transistor terminal to which E is affixed shows the emitter.

1 2 3 4 5

IC202 LM7001

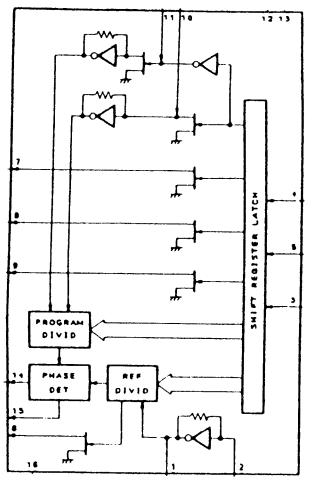

IC201 LA1265S

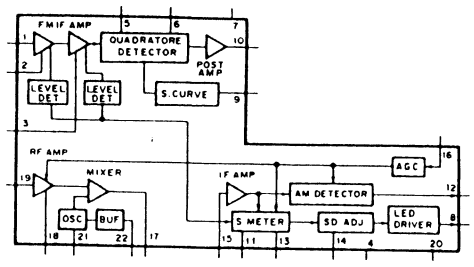

IC203 AN7470P

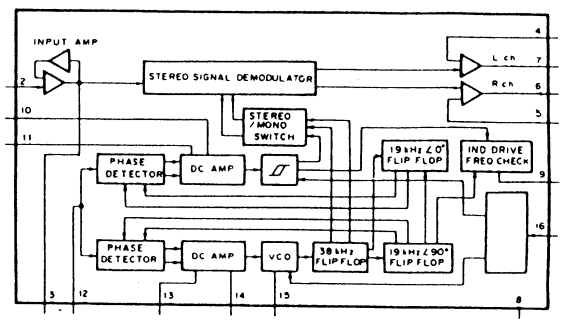

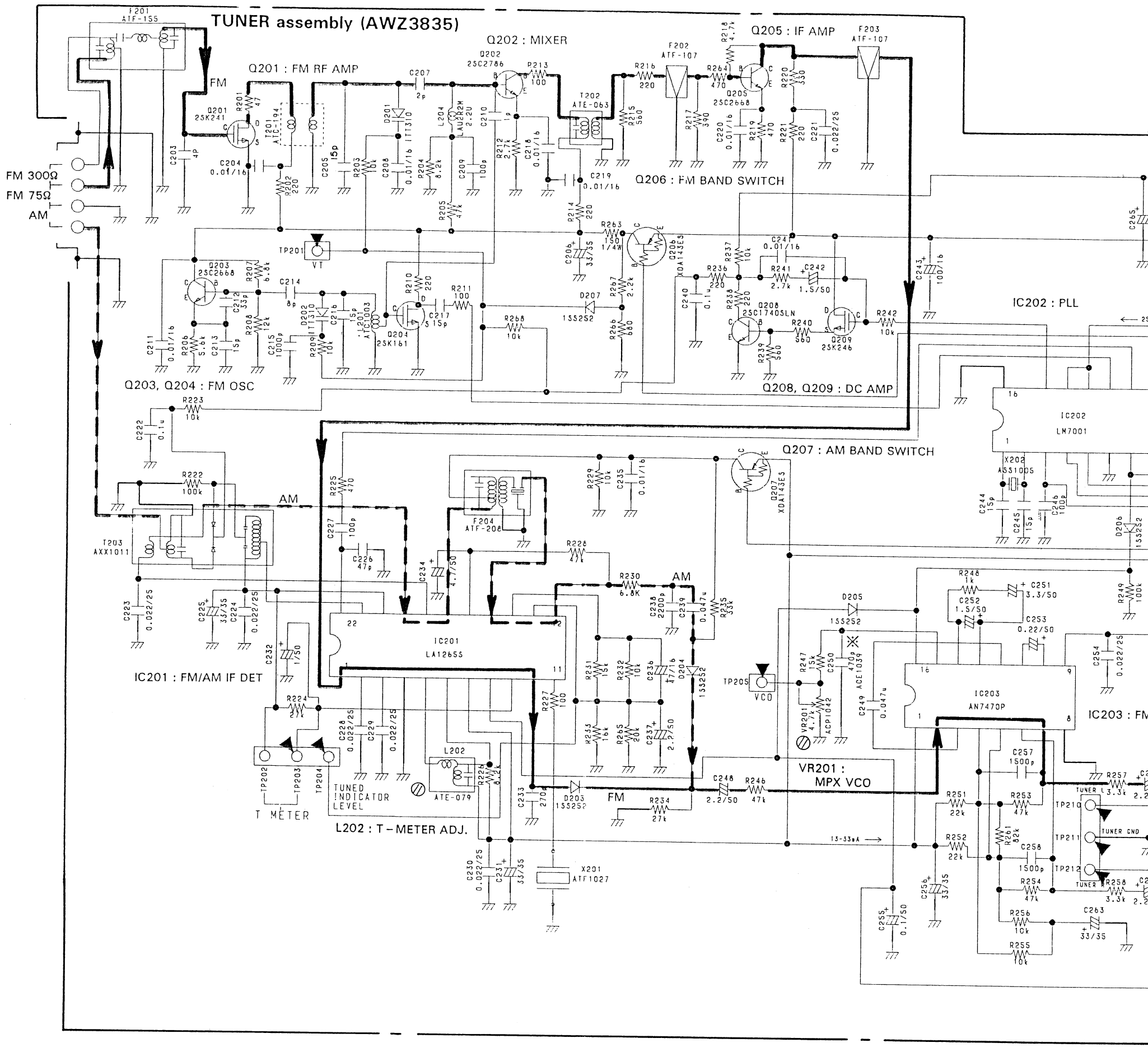

1 2 3 4 5

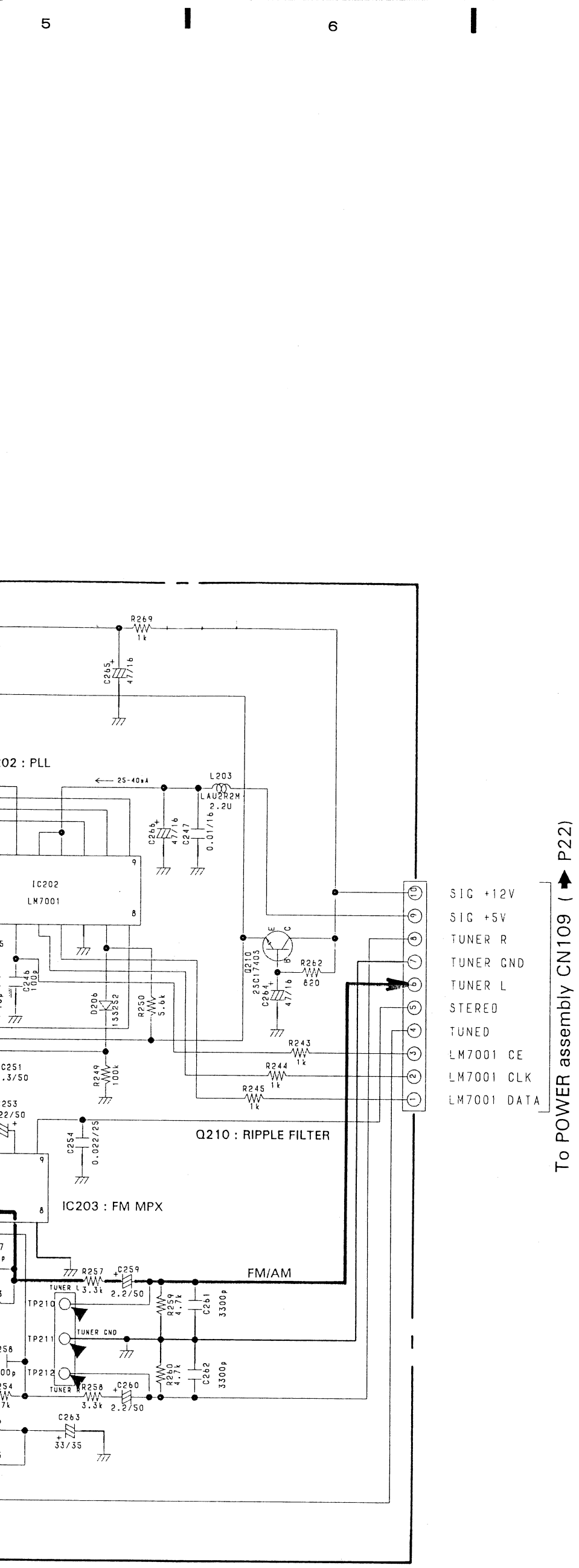
R269
1k
C265
47/16
IC202 : PLL
25-40mA
L203
LAU2R2M
2.2U
C266
47/16
C247
0.01/16
IC202
LM7001
C246
100p
D206
1SS252
R250
5.6k
Q210
2SC1740S
R262
620
C264
47/16
R243
1k
R244
1k
R245
1k
R249
100k
C251
.3/50
C253
22/50
C254
0.022/25
Q210 : RIPPLE FILTER
IC203 : FM MPX
R257
3.3k
C259
2.2/50
FM/AM
TUNER L
TP210
TP211
TUNER GND
TP212
TUNER R
R259
4.7k
C261
3300p
R260
4.7k
C262
3300p
R258
3.3k
C260
2.2/50
C263
33/35
SIG +12V
SIG +5V
TUNER R
TUNER GND
TUNER L
STEREO
TUNED
LM7001 CE
LM7001 CLK
LM7001 DATA
To POWER assembly CN109 (▲ P22)

2.3 POWER ASSEMBLY, TRANSE ASSEMBLY, HEADPHONE ASSEMBLY AND CASSETTE MECHA UNIT

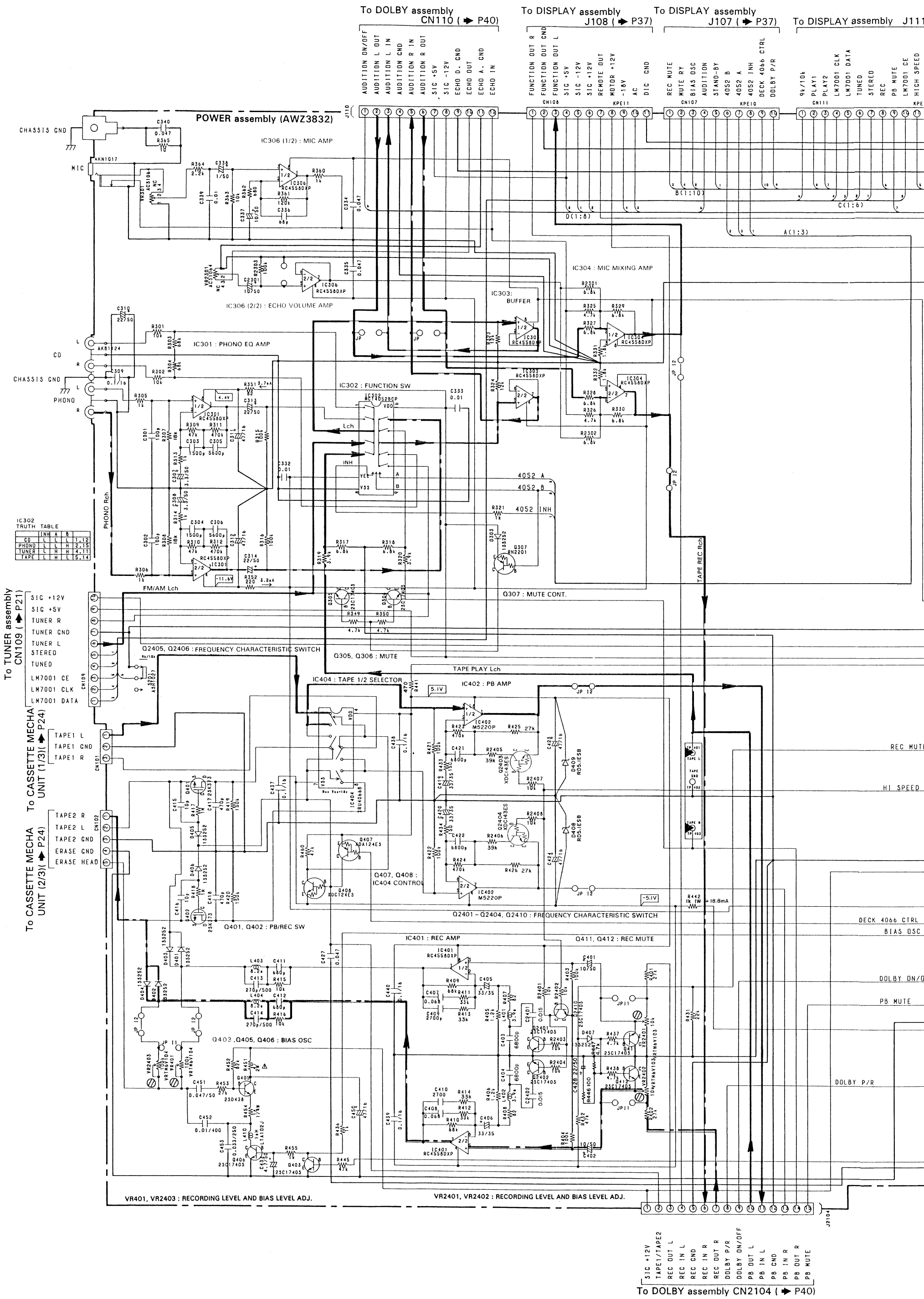

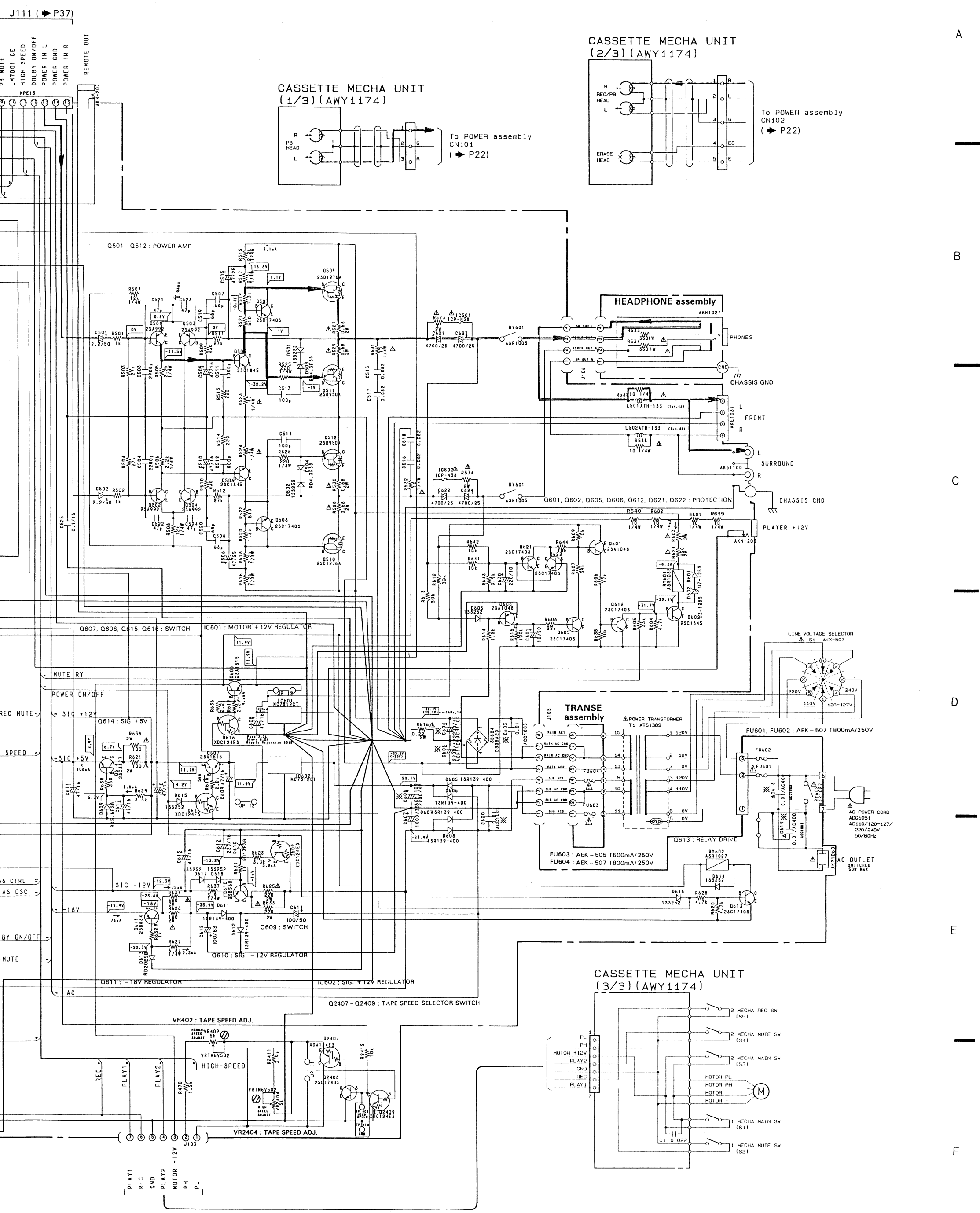
CASSETTE MECHA UNIT (1/3) (AWY1174)
CASSETTE MECHA UNIT (2/3) (AWY1174)
CASSETTE MECHA UNIT (3/3) (AWY1174)
To POWER assembly CN101 (➡ P22)
To POWER assembly CN102 (➡ P22)
Q501 – Q512 : POWER AMP
HEADPHONE assembly
PHONES
CHASSIS GND
FRONT
SURROUND
PLAYER +12V
Q601, Q602, Q605, Q606, Q612, Q621, Q622 : PROTECTION
Q607, Q608, Q615, Q616 : SWITCH
IC601 : MOTOR +12V REGULATOR
LINE VOLTAGE SELECTOR
TRANSE assembly
POWER TRANSFORMER
FU601, FU602 : AEK – 507 T800mA/250V
FU603 : AEK – 505 T500mA/250V
FU604 : AEK – 507 T800mA/250V
AC POWER CORD
AC OUTLET
Q613 : RELAY DRIVE
Q614 : SIG +5V
Q609 : SWITCH
Q610 : SIG. – 12V REGULATOR
Q611 : – 18V REGULATOR
IC602 : SIG. +12V REGULATOR
Q2407 – Q2409 : TAPE SPEED SELECTOR SWITCH
VR402 : TAPE SPEED ADJ.
VR2404 : TAPE SPEED ADJ.
HIGH-SPEED
MUTE RY
POWER ON/OFF
REC MUTE
SPEED
SIG +5V
SIG +12V
SIG –12V
–18V
AC
REC
PLAY1
PLAY2
J103
PLAY1
REC
GND
PLAY2
MOTOR +12V
PH
PL
PL
PH
MOTOR +12V
PLAY2
GND
REC
PLAY1
2 MECHA REC SW (S5)
2 MECHA MUTE SW (S4)
2 MECHA MAIN SW (S3)
MOTOR PL
MOTOR PH
MOTOR +
MOTOR –
1 MECHA MAIN SW (S1)
1 MECHA MUTE SW (S2)
C1 0.022
M

HEADPHONE assembly

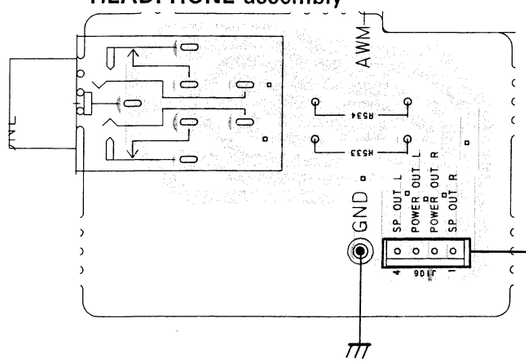

CASSETTE MECHA UNIT (1/3)(AWY1174)

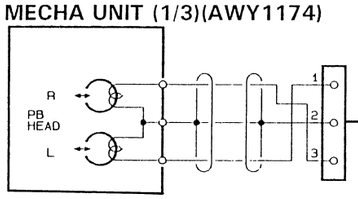

CASSETTE MECHA UNIT (2/3)(AWY1174)

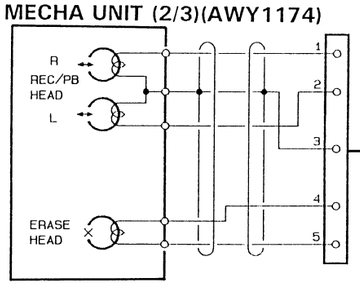

CASSETTE MECHA UNIT (3/3)(AWY1174)

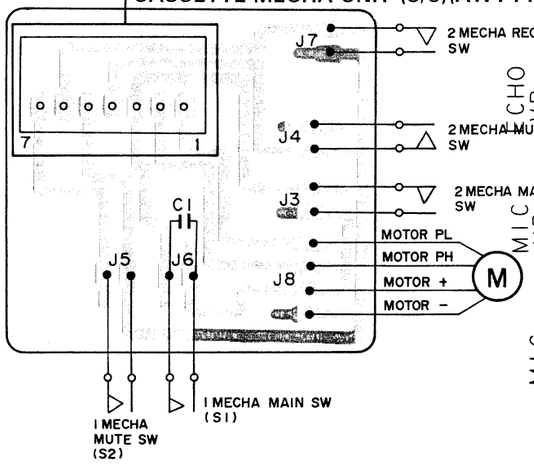

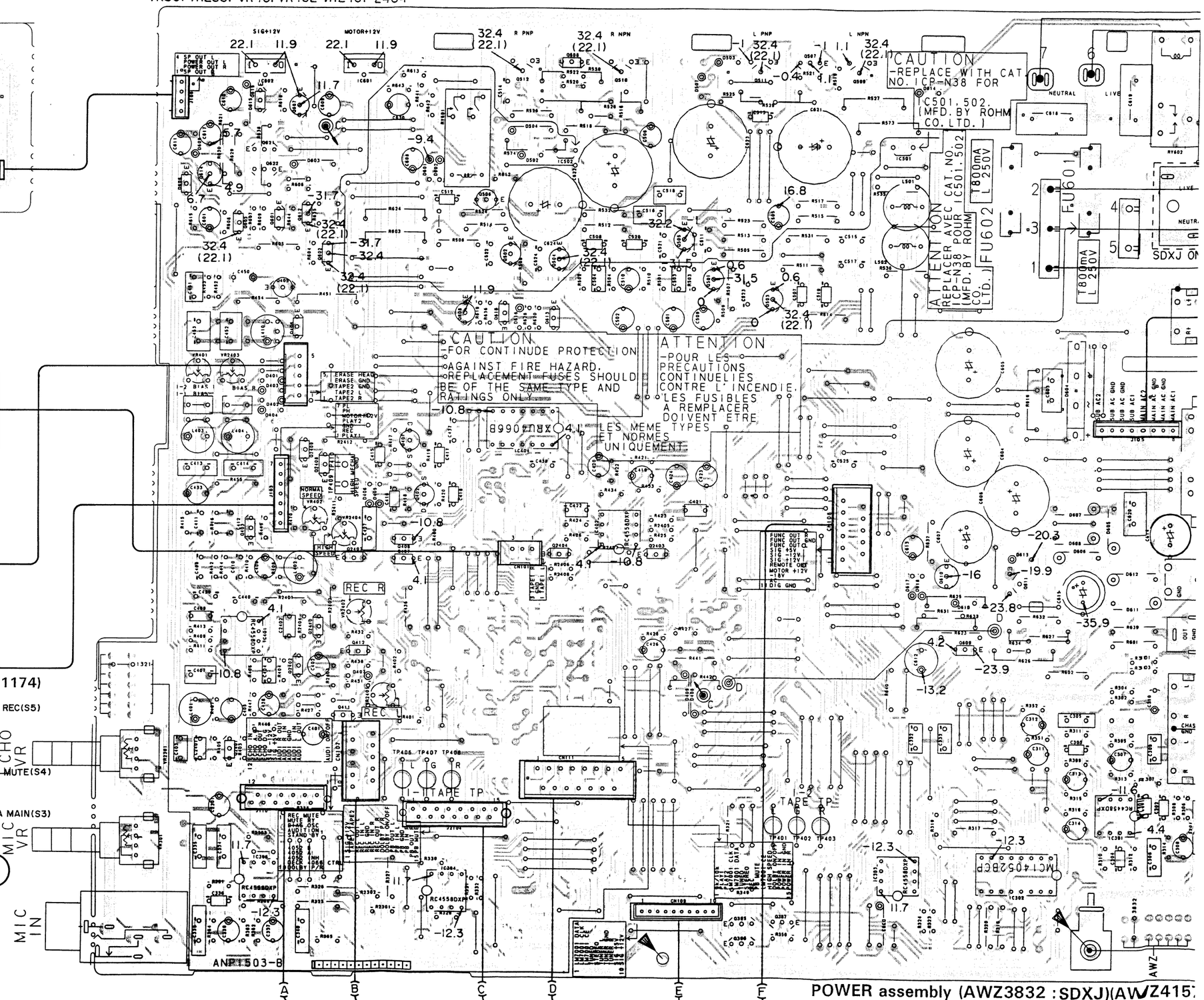

POWER assembly (AWZ3832 :SDXJ)(AWZ415

This P. C. B connection diagram is viewed from the parts mounted side.

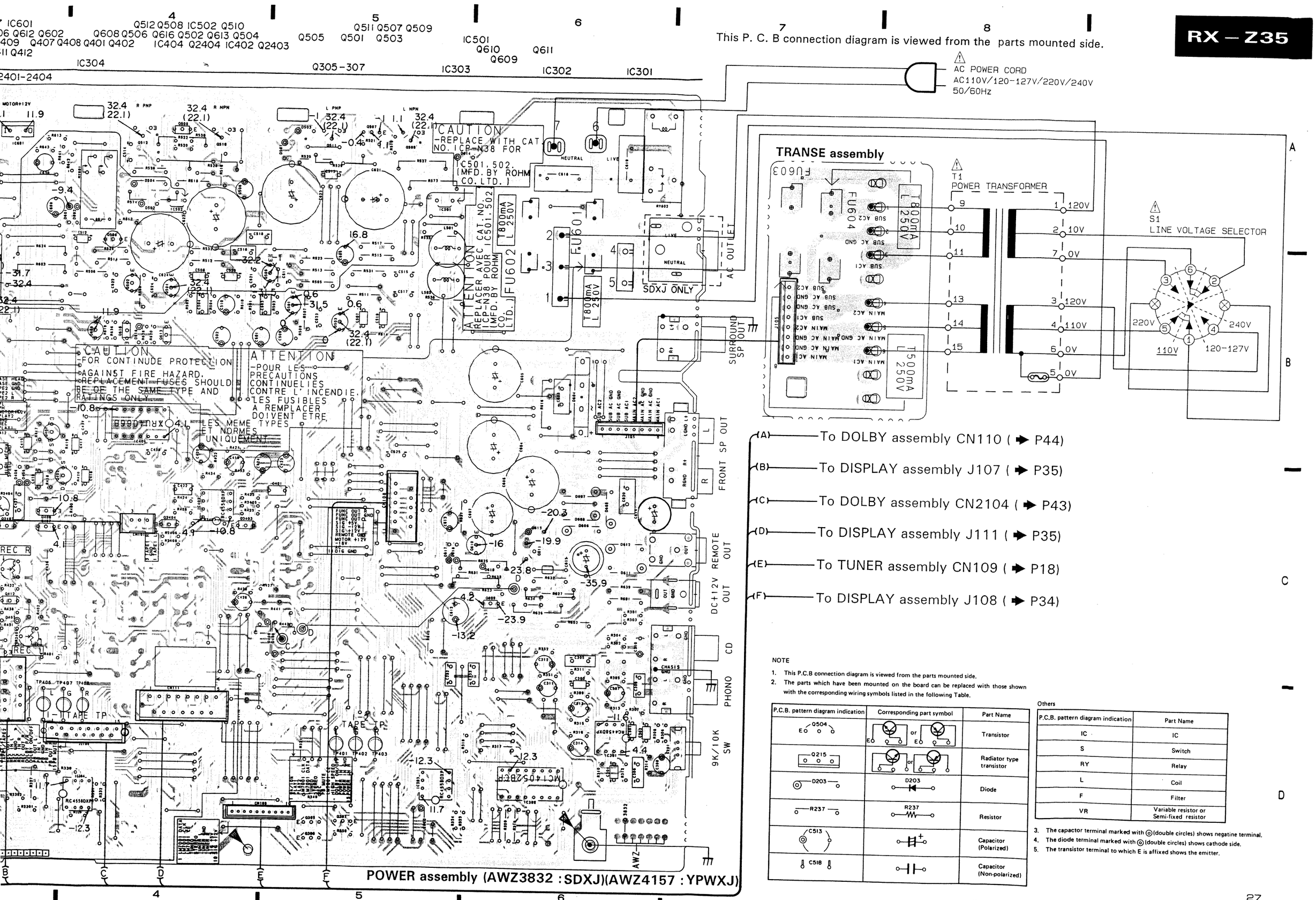

(A) To DOLBY assembly CN110 (➡ P44)

(B) To DISPLAY assembly J107 (➡ P35)

(C) To DOLBY assembly CN2104 (➡ P43)

(D) To DISPLAY assembly J111 (➡ P35)

(E) To TUNER assembly CN109 (➡ P18)

(F) To DISPLAY assembly J108 (➡ P34)

NOTE

1. This P.C.B connection diagram is viewed from the parts mounted side.
2. The parts which have been mounted on the board can be replaced with those shown with the corresponding wiring symbols listed in the following Table.

P.C.B. pattern diagram indication	Corresponding part symbol	Part Name
Q504 (E)	E or E	Transistor
Q215	or	Radiator type transistor
D203	D203	Diode
R237	R237	Resistor
C513	+	Capacitor (Polarized)
C518		Capacitor (Non-polarized)

Others

P.C.B. pattern diagram indication	Part Name
IC	IC
S	Switch
RY	Relay
L	Coil
F	Filter
VR	Variable resistor or Semi-fixed resistor

3. The capactor terminal marked with ◎(double circles) shows negatine terminal.
4. The diode terminal marked with ◎(double circles) shows cathode side.
5. The transistor terminal to which E is affixed shows the emitter.

This P. C. B. connection diagram is viewed from the foil side.

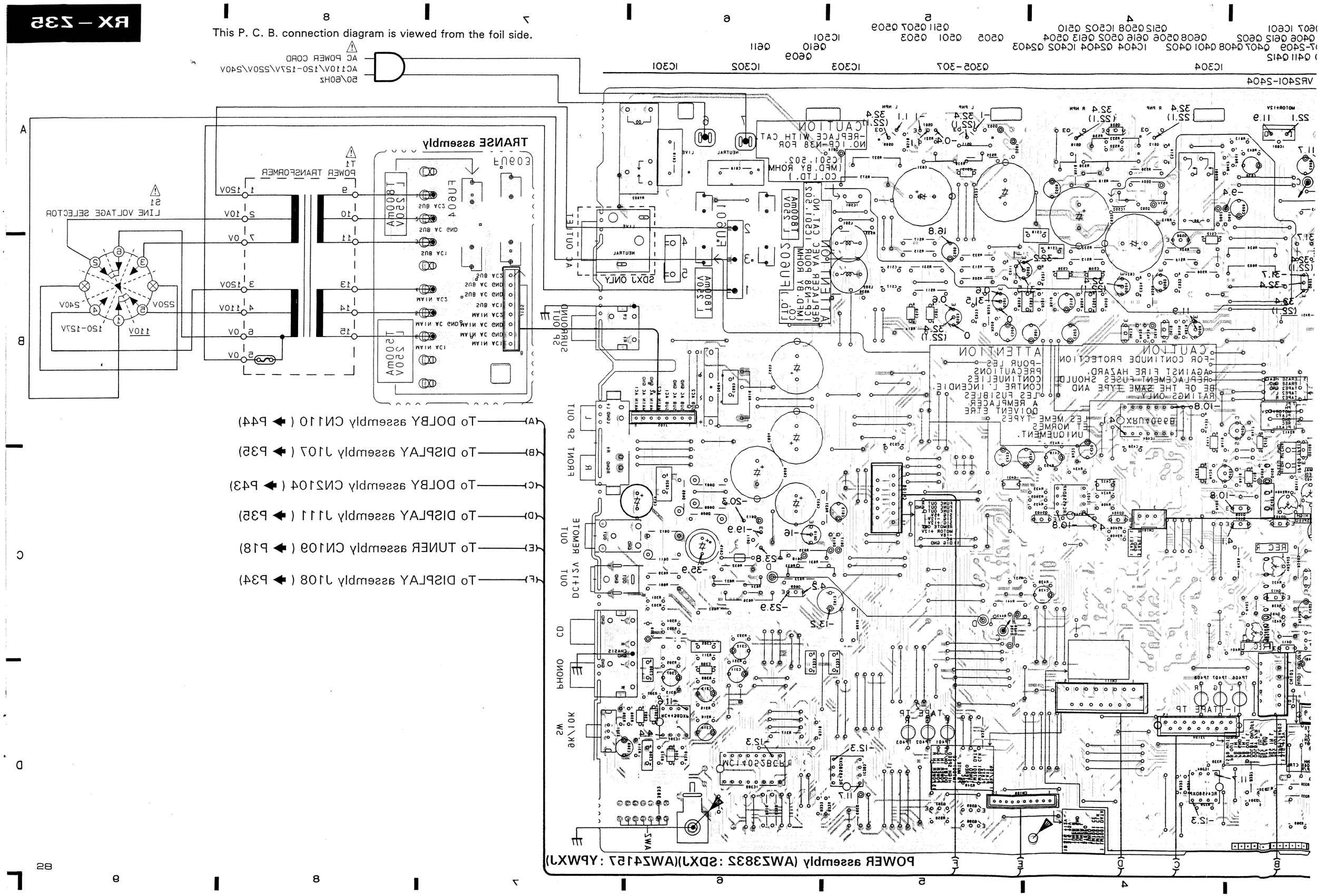

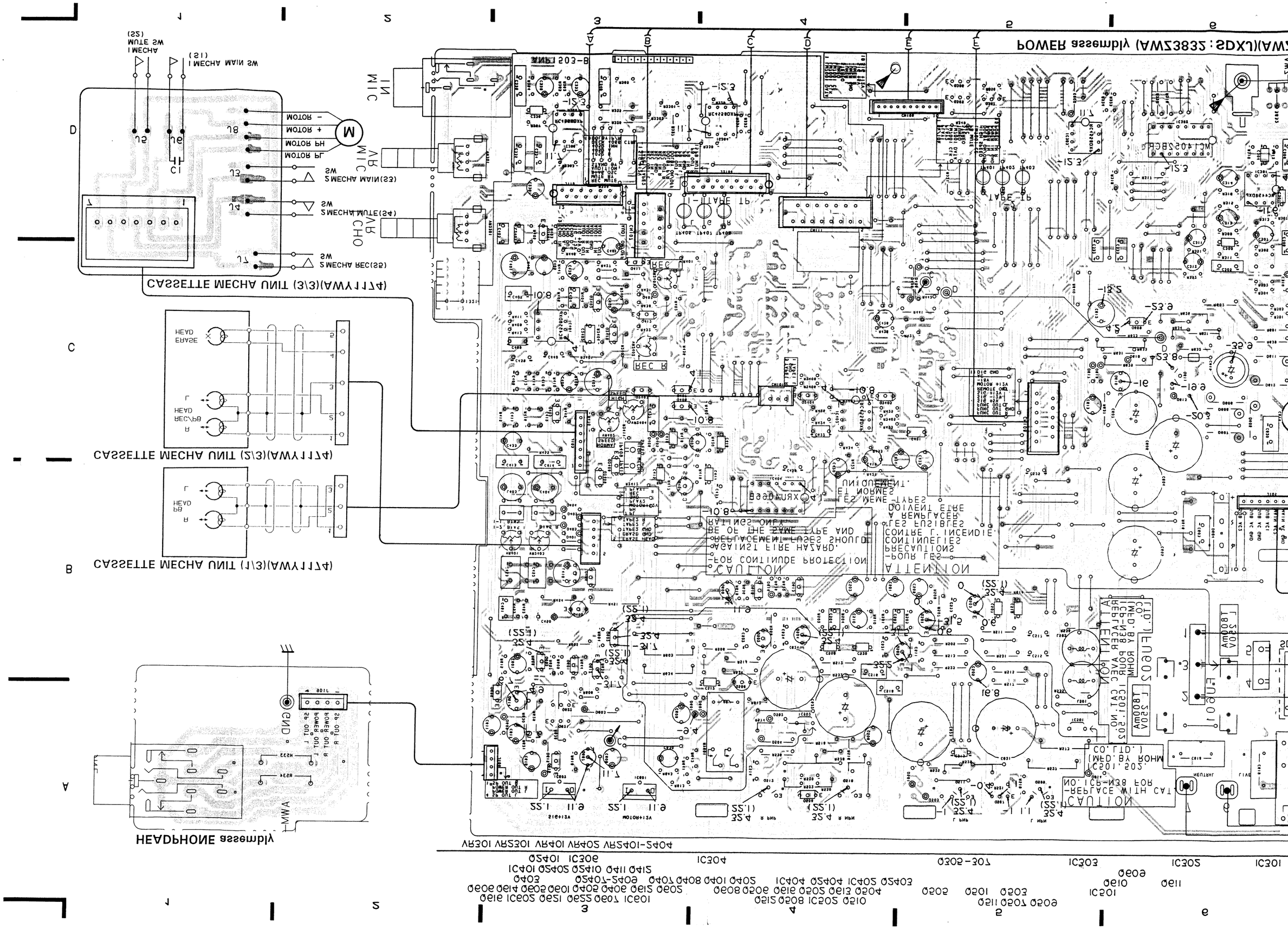

HEADPHONE assembly
CASSETTE MECHA UNIT (1/3)(AWY1174)
CASSETTE MECHA UNIT (2/3)(AWY1174)
CASSETTE MECHA UNIT (3/3)(AWY1174)
PB HEAD
REC/PB HEAD
ERASE HEAD
2 MECHA REC(S5) SW
2 MECHA MUTE(S4) SW
2 MECHA MAIN(S3) SW
1 MECHA MAIN SW (S1)
1 MECHA MUTE SW (S2)
MOTOR PL
MOTOR PH
MOTOR +
MOTOR −
M
MIC IN
MIC VR
ECHO VR
GND
CAUTION -FOR CONTINUDE PROTECTION AGAINST FIRE HAZARD, REPLACEMENT FUSES SHOULD BE OF THE SAME TYPE AND RATINGS ONLY.
ATTENTION -POUR LES PRECAUTIONS CONTINUELIES CONTRE L' INCENDIE, LES FUSIBLES A REMPLACER DOIVENT ETRE LES MEME TYPES ET NORMES UNIQUEMENT.
CAUTION -REPLACE WITH CAT NO. ICP-N38 FOR IC501,502. (MFD. BY ROHM CO.,LTD.)
TAPE TP
REC R
VR301 VR2301 VR401 VR402 VR2401-2404
POWER assembly (AWZ3832 : SDXJ)(AWZ
ANP1503-B
A B C D E F
1 2 3 4 5 6

2.4 DISPLAY ASSEMBLY, SWITCH ASSEMBLY AND VOLUME ASSEMBLY

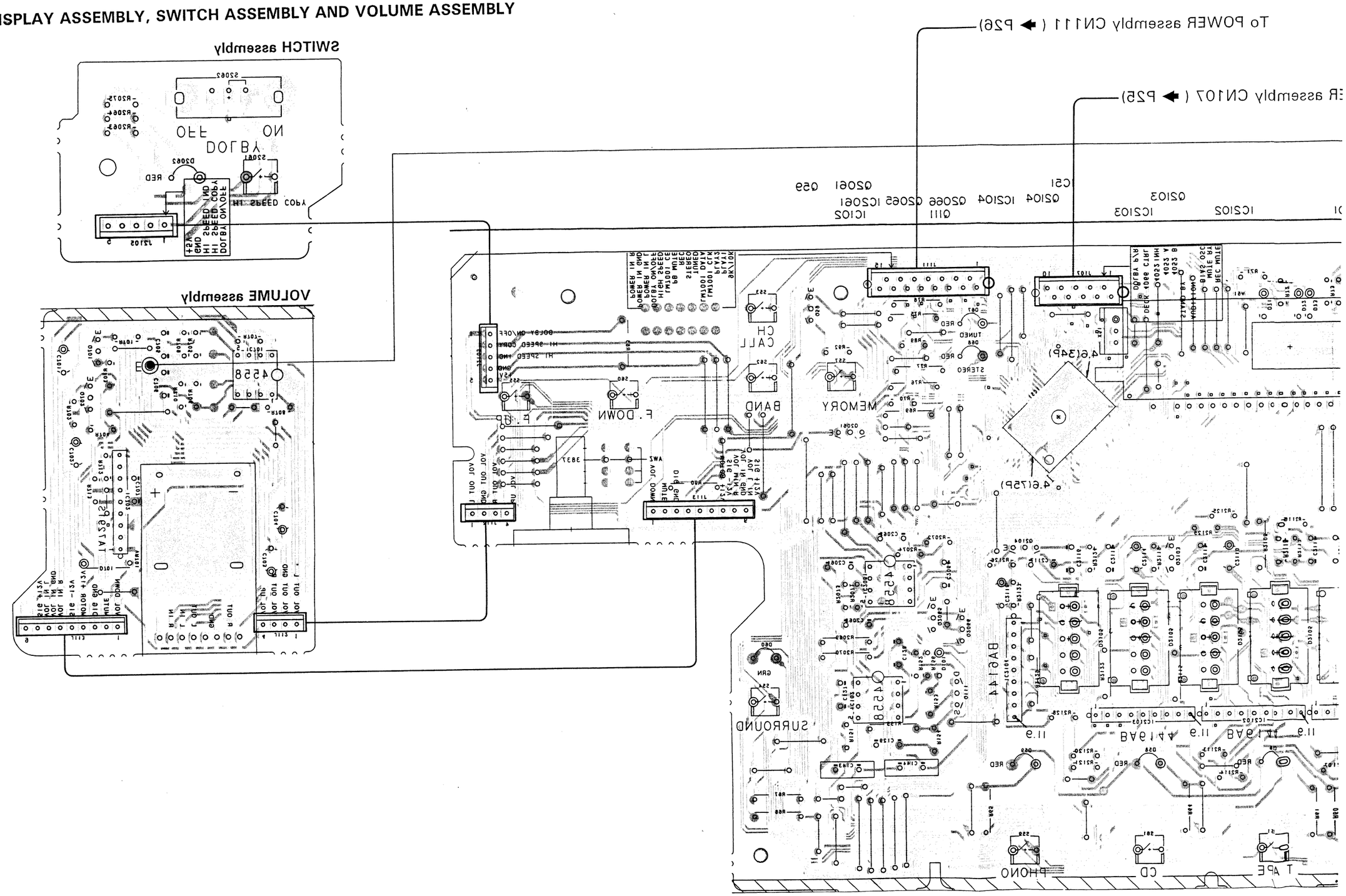

This P. C. B. connection diagra

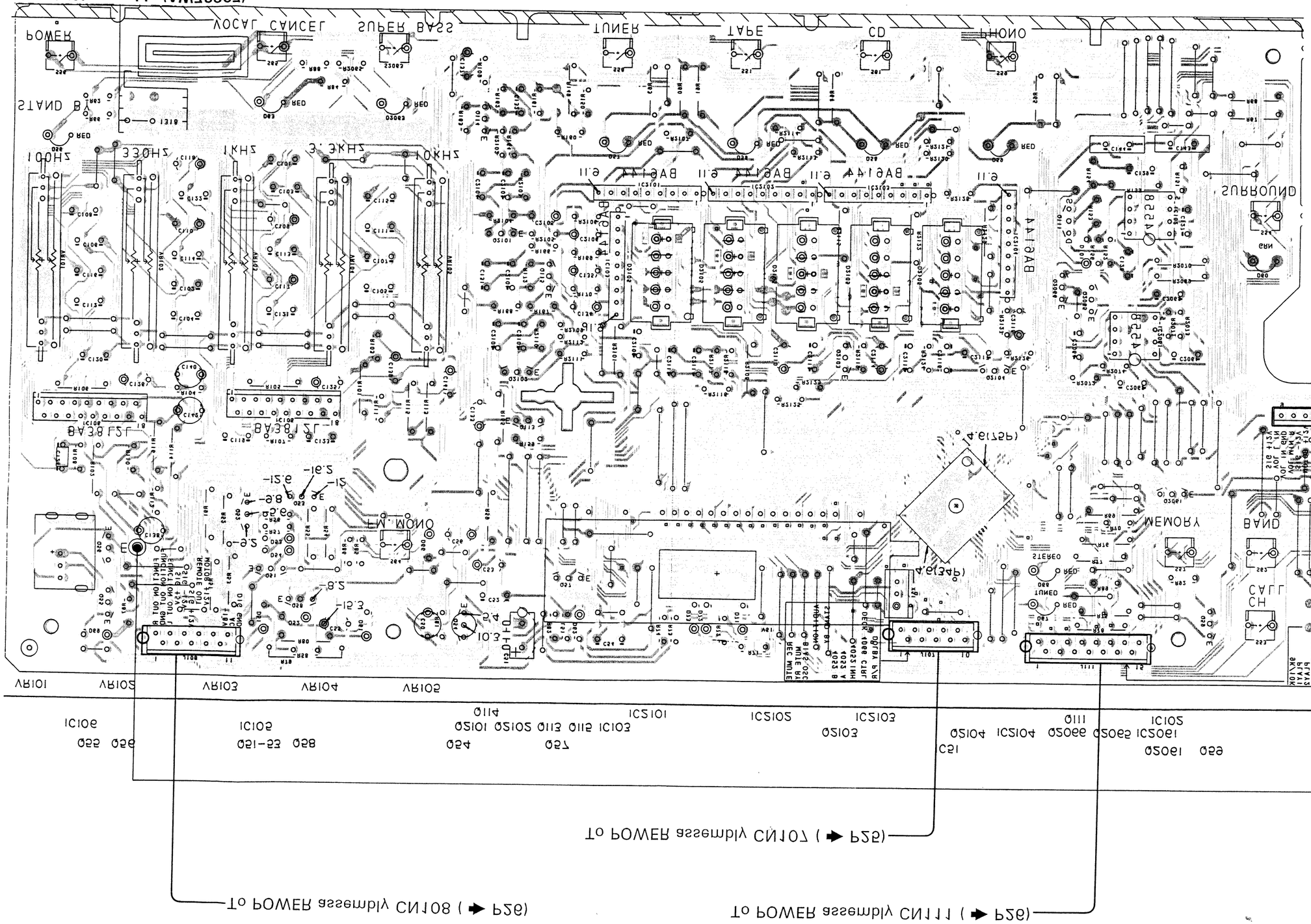

To POWER assembly CN111 (→ P26)
To POWER assembly CN107 (→ P25)
To POWER assembly CN108 (→ P26)
A
B
C
D
VR101
VR102
VR103
VR104
VR105
IC101
IC102
IC103
IC104
IC105
IC106
IC2101
IC2102
IC2103
IC2104
BA3812L
BA6144
4558
CH CALL
BAND
MEMORY
F.DOWN
FM.MONO
SURROUND
PHONO
CD
TAPE
TUNER
SUPER BASS
VOCAL CANCEL
POWER
STAND BY
10KHz
3.3KHz
1KHz
330Hz
100Hz
DISPLAY assembly (AWZ3837)

This P. C. B. connection diagram is viewed from the foil side.

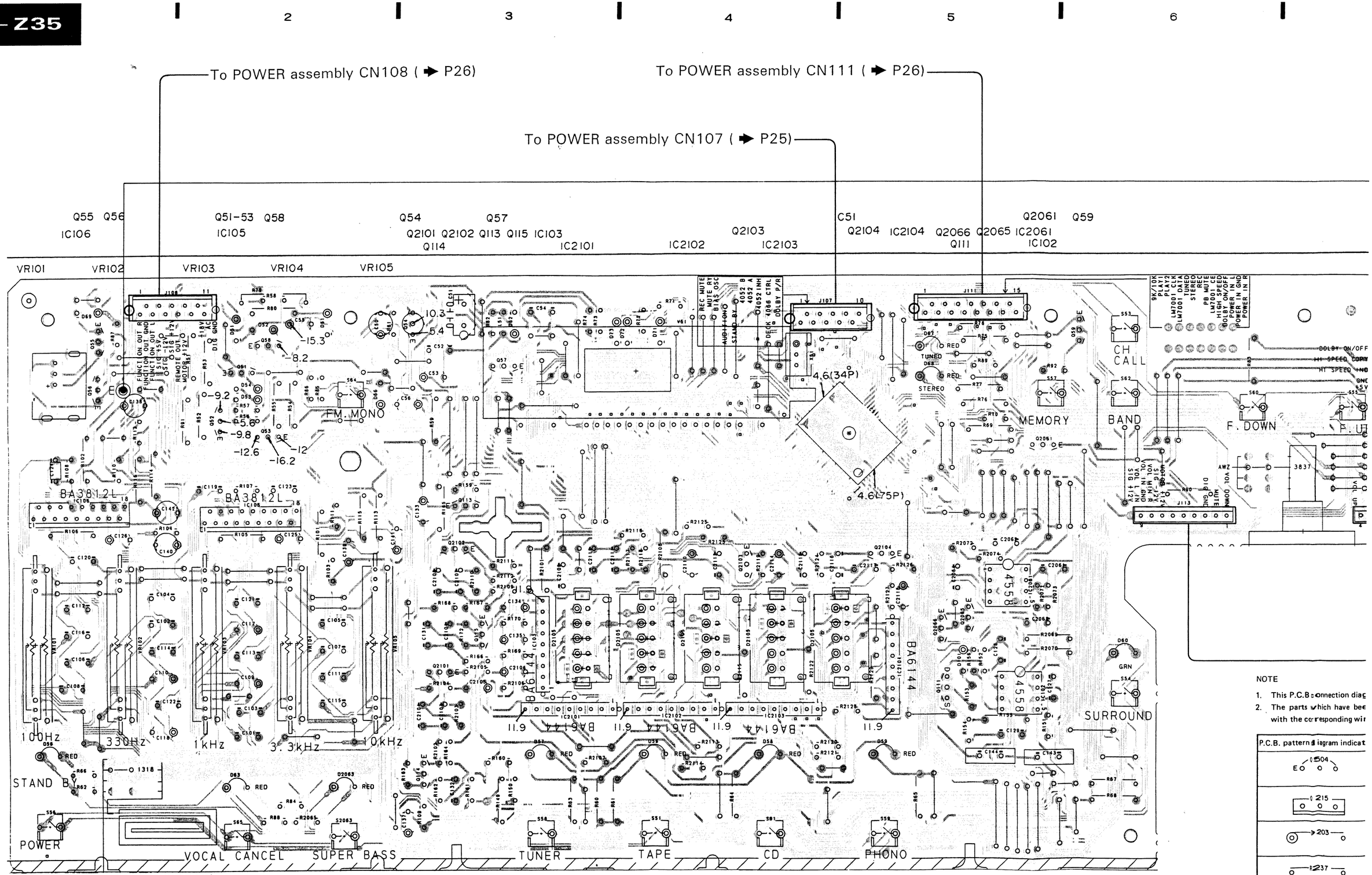

DISPLAY assembly (AWZ3837)

This P. C. B connection diagram is viewed from the parts mounted side.

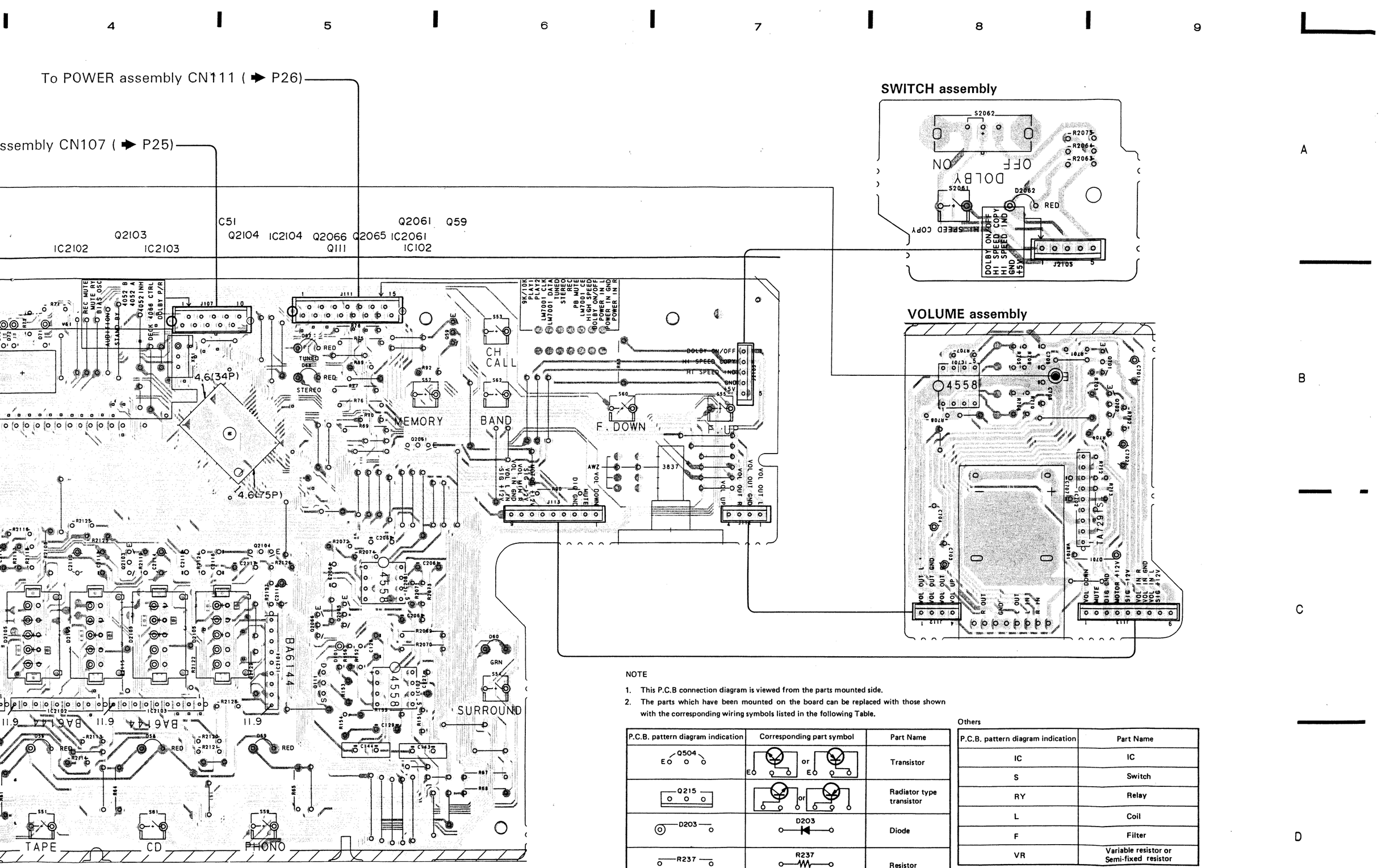

NOTE

1. This P.C.B connection diagram is viewed from the parts mounted side.
2. The parts which have been mounted on the board can be replaced with those shown with the corresponding wiring symbols listed in the following Table.

P.C.B. pattern diagram indication	Corresponding part symbol	Part Name
Q504 (E)	E or E	Transistor
Q215	or	Radiator type transistor
D203	D203	Diode
R237	R237	Resistor
C513	+	Capacitor (Polarized)
C518		Capacitor (Non-polarized)

Others

P.C.B. pattern diagram indication	Part Name
IC	IC
S	Switch
RY	Relay
L	Coil
F	Filter
VR	Variable resistor or Semi-fixed resistor

3. The capactor terminal marked with ◎(double circles) shows negatine terminal.
4. The diode terminal marked with ◎(double circles) shows cathode side.
5. The transistor terminal to which E is affixed shows the emitter.

is viewed from the parts mounted side.

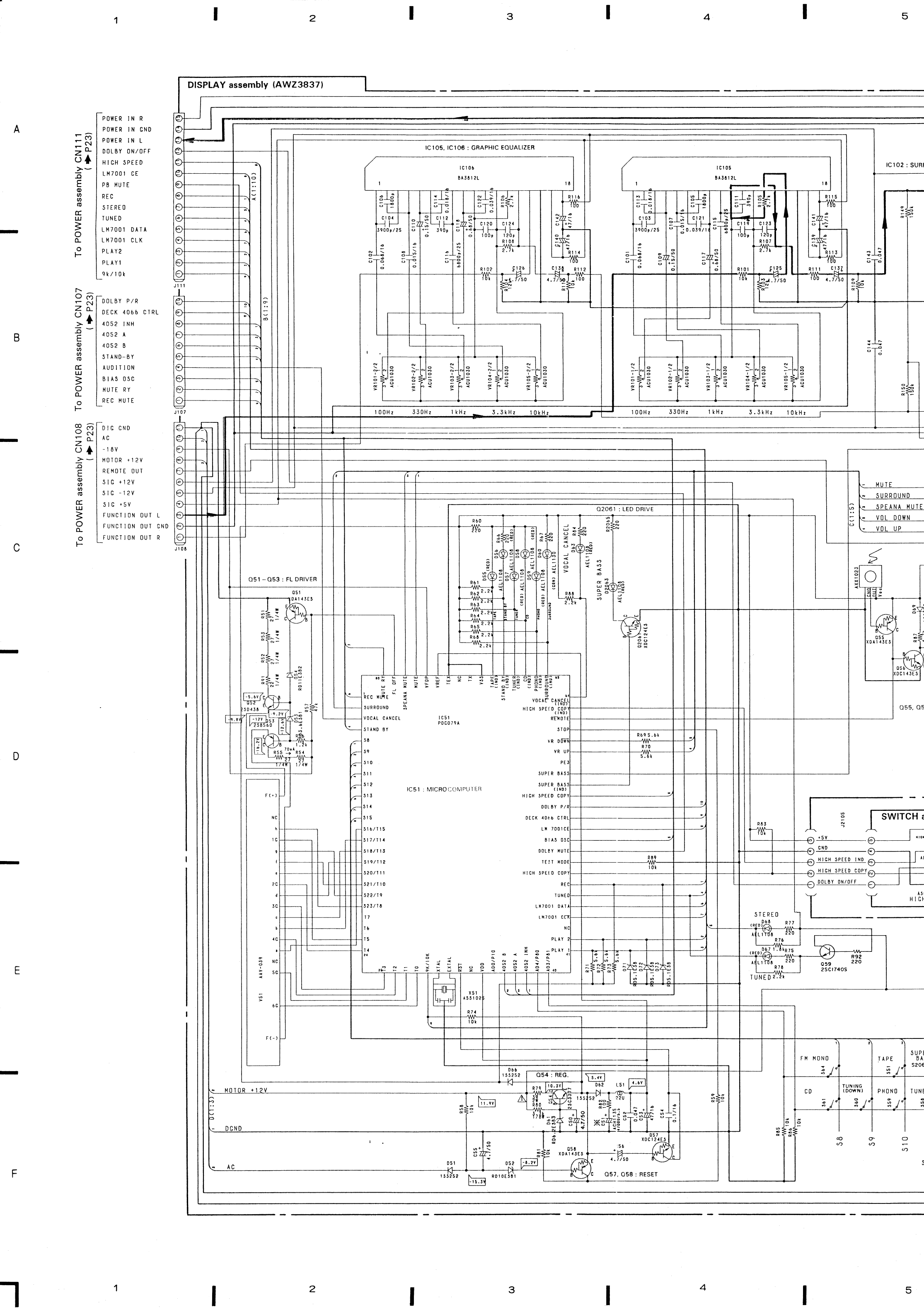
DISPLAY assembly (AWZ3837)
To POWER assembly CN111 (P23)
POWER IN R
POWER IN GND
POWER IN L
DOLBY ON/OFF
HIGH SPEED
LM7001 CE
PB MUTE
REC
STEREO
TUNED
LM7001 DATA
LM7001 CLK
PLAY2
PLAY1
9k/10k
To POWER assembly CN107 (P23)
DOLBY P/R
DECK 4066 CTRL
4052 INH
4052 A
4052 B
STAND-BY
AUDITION
BIAS OSC
MUTE RY
REC MUTE
To POWER assembly CN108 (P23)
DIG GND
AC
-18V
MOTOR +12V
REMOTE OUT
SIG +12V
SIG -12V
SIG +5V
FUNCTION OUT L
FUNCTION OUT GND
FUNCTION OUT R
IC105, IC106 : GRAPHIC EQUALIZER
IC106 BA3812L
IC105 BA3812L
IC102 : SURR
100Hz 330Hz 1kHz 3.3kHz 10kHz
Q2061 : LED DRIVE
VOCAL CANCEL
SUPER BASS
Q51 – Q53 : FL DRIVER
IC51 : MICROCOMPUTER
IC51 PDC079A
MUTE
SURROUND
SPEANA MUTE
VOL DOWN
VOL UP
SWITCH a
HIGH SPEED IND
HIGH SPEED COPY
DOLBY ON/OFF
STEREO
TUNED
FM MONO
TAPE
CD
TUNING (DOWN)
PHONO
Q54 : REG.
Q57, Q58 : RESET
MOTOR +12V
DGND
AC

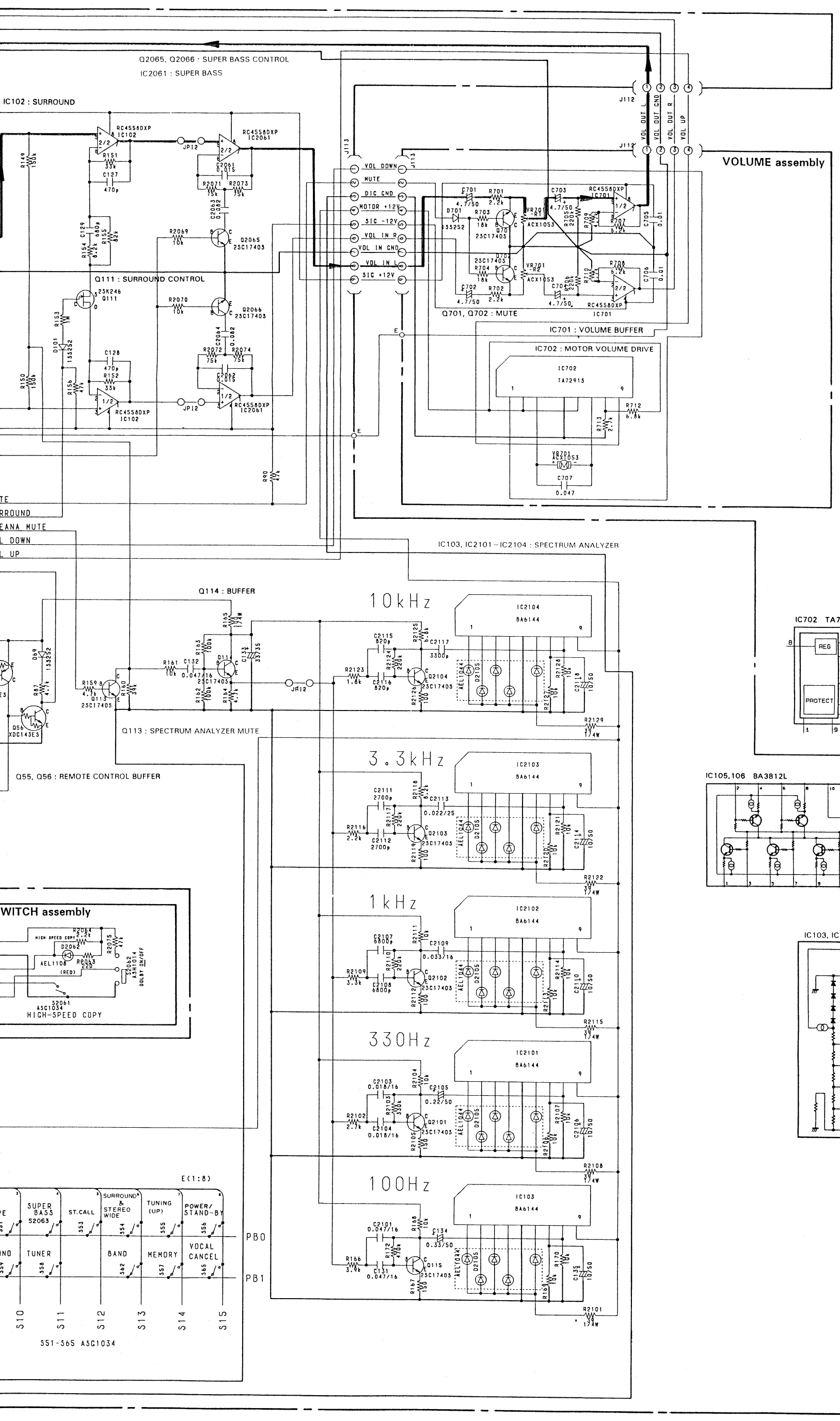
Q2065, Q2066 : SUPER BASS CONTROL
IC2061 : SUPER BASS
IC102 : SURROUND
Q111 : SURROUND CONTROL
VOLUME assembly
VOL OUT L
VOL OUT GND
VOL OUT R
VOL UP
VOL DOWN
MUTE
DIC GND
MOTOR +12V
SIC -12V
VOL IN R
VOL IN GND
VOL IN L
SIC +12V
Q701, Q702 : MUTE
IC701 : VOLUME BUFFER
IC702 : MOTOR VOLUME DRIVE
IC702
TA72915
IC103, IC2101 – IC2104 : SPECTRUM ANALYZER
Q114 : BUFFER
10kHz
IC2104
BA6144
Q113 : SPECTRUM ANALYZER MUTE
Q55, Q56 : REMOTE CONTROL BUFFER
3.3kHz
IC2103
BA6144
1kHz
IC2102
BA6144
330Hz
IC2101
BA6144
100Hz
IC103
BA6144
PB0
PB1
SWITCH assembly
HIGH-SPEED COPY
E(1:8)
SUPER BASS
ST.CALL
SURROUND & STEREO WIDE
TUNING (UP)
POWER/ STAND-BY
TUNER
BAND
MEMORY
VOCAL CANCEL
S10
S11
S12
S13
S14
S15
S51-S65 ASC1034
IC702 TA7291S
REG
PROTECT
IC105,106 BA3812L
IC103, IC2101 – IC2104 BA6144
CONSTANT CURRENT

2.5 DOLBY ASSEMBLY

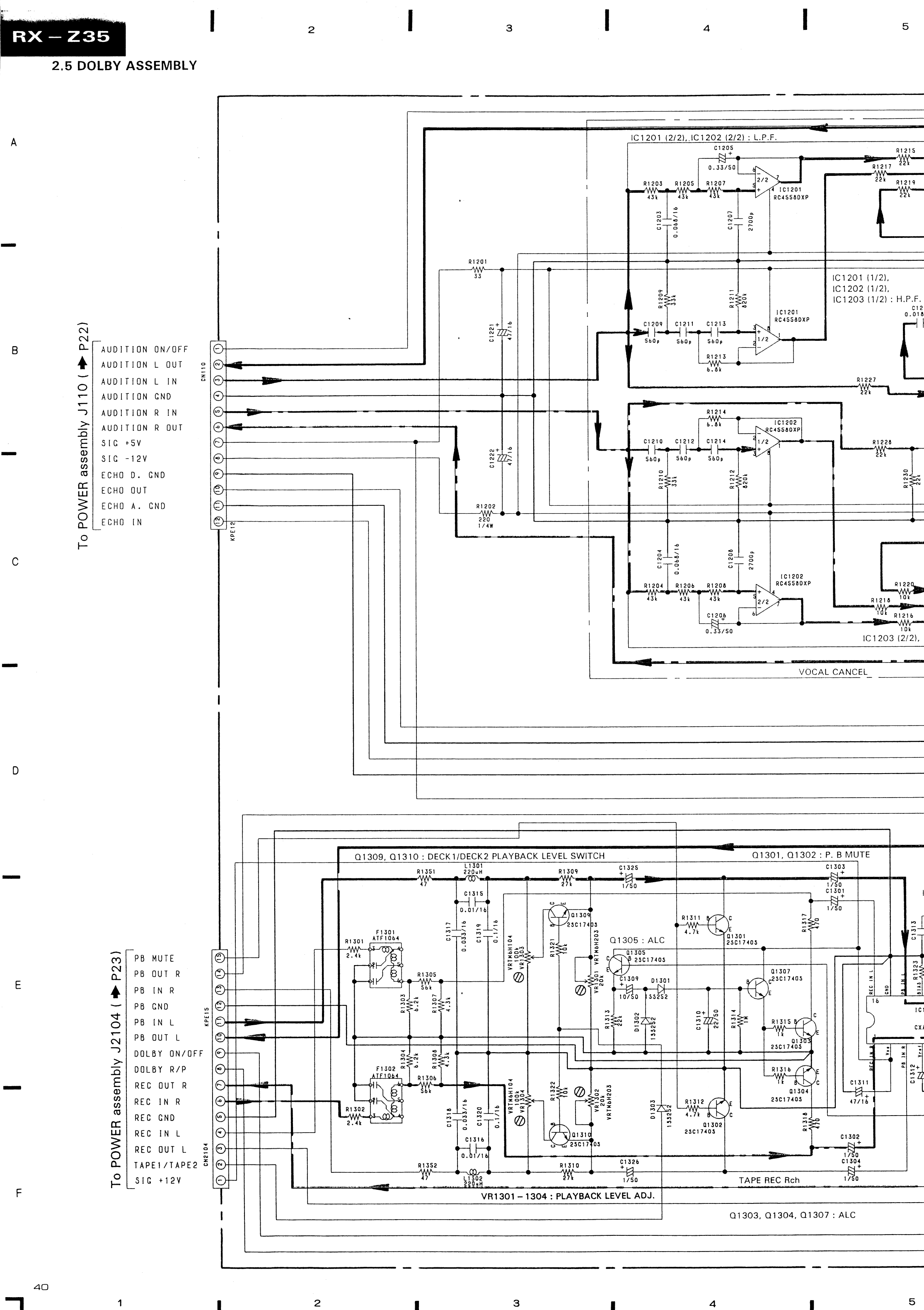

DOLBY assembly (AWZ3967)

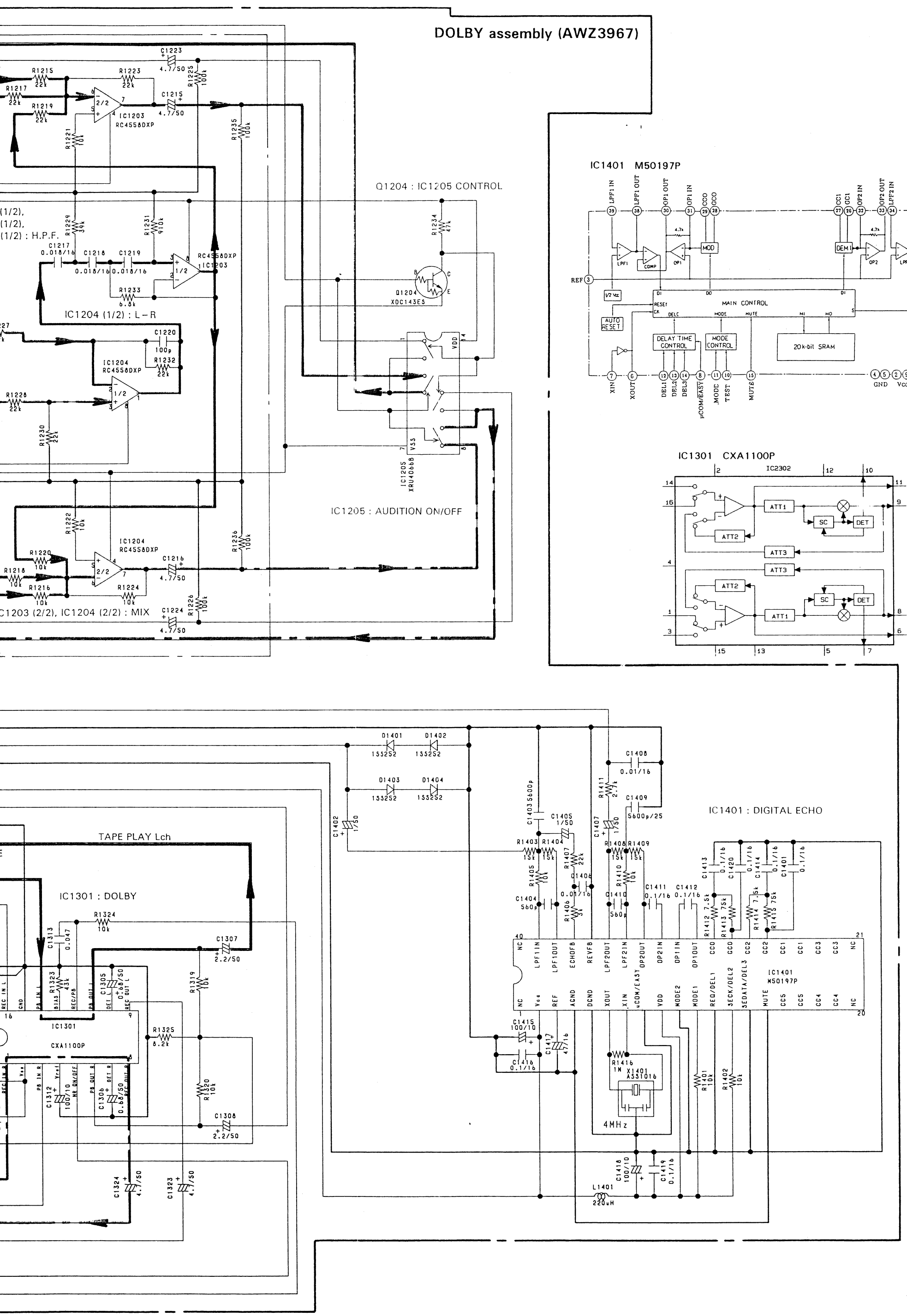

DOLBY assembly (AWZ3967)

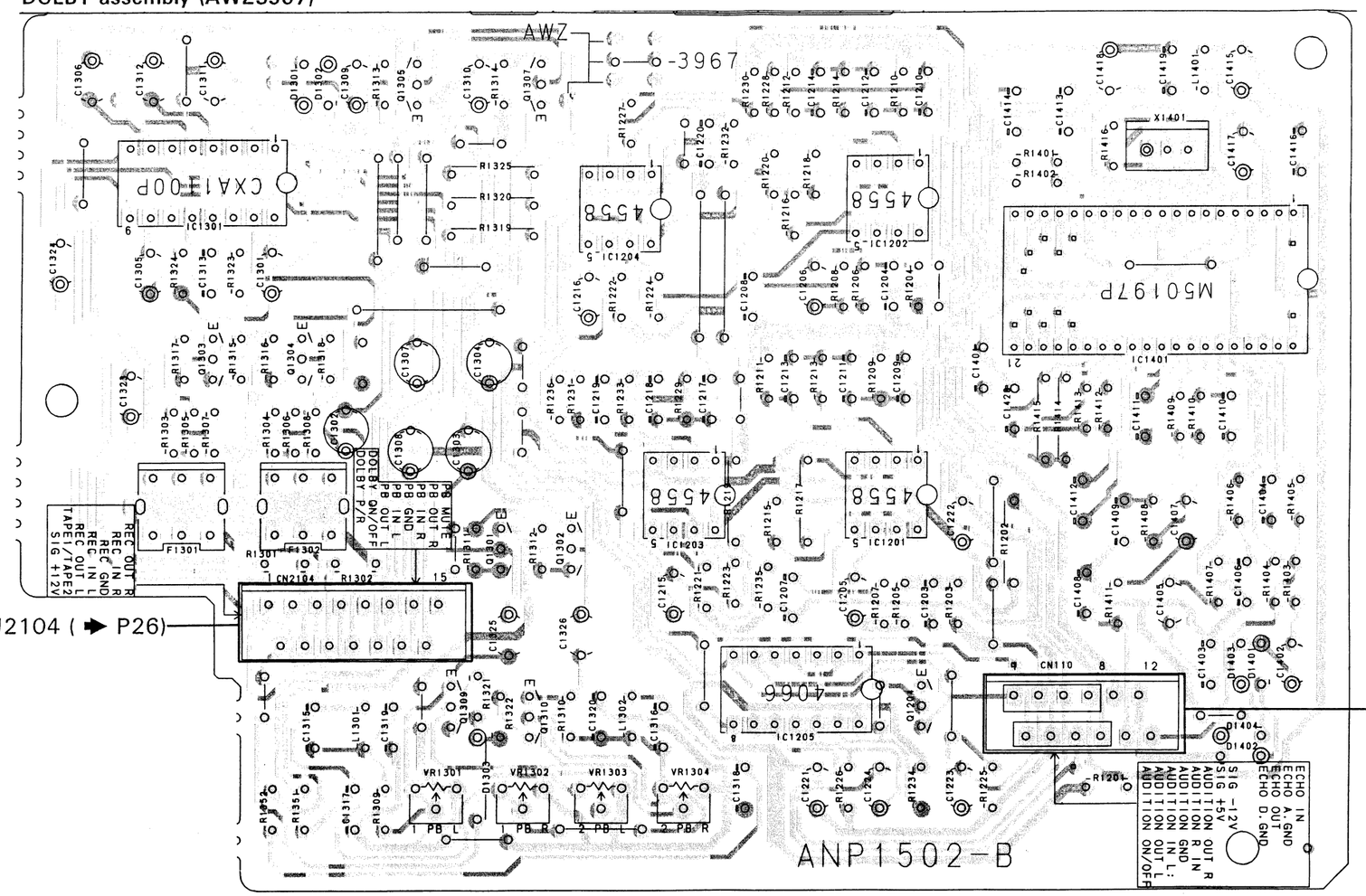

NOTE

1. This P.C.B connection diagram is viewed from the parts mounted side.
2. The parts which have been mounted on the board can be replaced with those shown with the corresponding wiring symbols listed in the following Table.

P.C.B. pattern diagram indication	Corresponding part symbol	Part Name
Q504 (E)	E or E	Transistor
Q215	or	Radiator type transistor
D203	D203	Diode
R237	R237	Resistor
C513	+	Capacitor (Polarized)
C518		Capacitor (Non-polarized)

Others

P.C.B. pattern diagram indication	Part Name
IC	IC
S	Switch
RY	Relay
L	Coil
F	Filter
VR	Variable resistor or Semi-fixed resistor

3. The capactor terminal marked with ◎ (double circles) shows negatine terminal.
4. The diode terminal marked with ◎ (double circles) shows cathode side.
5. The transistor terminal to which E is affixed shows the emitter.

This P. C. B connection diagram is viewed from the parts mounted side.

3. PCB PARTS LIST

NOTES:

- *Parts marked by "NSP" are generally unavailable because they are not in our Master Spare Parts List.*
- *The ⚠ mark found on some component parts indicates the importance of the safety factor of the part. Therefore, when replacing, be sure to use parts of identical designation.*
- *Parts marked by "◉" are not always kept in stock. Their delivery time may be longer than usual or they may be unavailable.*
- *When ordering resistors, first convert resistance values into code form as shown in the following examples.*

Ex. 1 When there are 2 effective digits (any digit apart from 0), such as 560 ohm and 47k ohm (tolerance is shown by J = 5%, and K = 10%).

560Ω → 56 × 10^1 → 561 ..... RD1/8PM 5 6 1 J
47kΩ → 47 × 10^3 → 473 ..... RD1/4PS 4 7 3 J
0.5Ω → 0R5 ..... RN2H 0 R 5 K
1Ω → 010 ..... RS1P 0 1 0 K

Ex. 2 When there are 3 effective digits (such as in high precision metal film resistors).
5.62kΩ → 562 × 10^1 → 5621 ..... RN1/4PC 5 6 2 1 F

Mark	No.	Description	Parts No.
LIST OF ASSEMBLIES			
NSP		VOLUME ASSEMBLY	AWZ3829
◉		TUNER ASSEMBLY	AWZ3835
NSP		SWITCH ASSEMBLY	AWZ3836
◉		DISPLAY ASSEMBLY	AWZ3837
◉		DOLBY ASSEMBLY	AWZ3967
◉		POWER ASSEMBLY	AWZ3832
NSP		HEADPHONE ASSEMBLY	AWZ3834
NSP		TRANSE ASSEMBLY	AWZ3863
VOLUME ASSEMBLY			
SEMICONDUCTORS			
	IC701	OP–AMP IC	RC4558DXP
	IC702	MECHANISM DRIVER IC	TA7291S
	Q701	TRANSISTOR	2SC1740S
	Q702	TRANSISTOR	2SC1740S
	D701	DIODE	1SS252
CAPACITORS			
	C701–704	ELECTR. CAPACITOR	CEAS4R7M50
	C705, 706	CERAMIC CAPACITOR	CKCYF103Z50
	C707	CERAMIC CAPACITOR	CKCYF473Z50
RESISTORS			
	VR701	VARIABLE RESISTOR (100k-4B × 2)	ACX1053
		Other resistors	RD1/8PM□□□J

Mark	No.	Description	Parts No.
TUNER ASSEMBLY			
SEMICONDUCTORS			
	IC201	AM/FM IC	LA1265S
	IC202	PLL IC	LM7001
	IC203	MPX IC	AN7470P
	Q201	MOS–FET	2SK241
	Q202	TRANSISTOR	2SC2786
	Q203	TRANSISTOR	2SC2668
	Q204	N–FET	2SK161
	Q205	TRANSISTOR	2SC2668
	Q206, 207	TRANSISTOR	XDA143ES
	Q208	TRANSISTOR	2SC1740SLN
	Q209	N–FET	2SK246
	Q210	TRANSISTOR	2SC1740S
	D201, 202	VARI–CAP DIODE	ITT310
	D203–207	DIODE	1SS252
COILS & TRANSFORMER			
	F201	CERAMIC FILTER	ATF–155
	F202, 203	CERAMIC FILTER	ATF–107
	F204	CERAMIC FILTER	ATF–208
	L201	COIL	ATC1003
	L202	COIL	ATE–079
	L203, 204	AXIAL INDUCTOR	LAU2R2M
	T201	COIL	ATC–194
	T202	IF TRANSFORMER	ATE–063
CAPACITORS			
	C203	CERAMIC CAPACITOR	CCMCH040C50
	C204	CERAMIC CAPACITOR	CKPUYY103N16
	C205	CERAMIC CAPACITOR	CCDRH150J50
	C206	ELECTR. CAPACITOR	CEAS330M35
	C207	CERAMIC CAPACITOR	CCDCH020C50

Mark No.	Description	Parts No.
C208	CERAMIC CAPACITOR	CKPUYY103N16
C209	CERAMIC CAPACITOR	CKPUYB101K50
C210	CERAMIC CAPACITOR	CCDCH010C50
C211	CERAMIC CAPACITOR	CKPUYY103N16
C212	CERAMIC CAPACITOR	CCMCH330J50
C213	CERAMIC CAPACITOR	CCMCH150J50
C214	CERAMIC CAPACITOR	CCMCH080D50
C215	CERAMIC CAPACITOR	CKPUYB102K50
C216	CERAMIC CAPACITOR	CCDTH150J50
C217	CERAMIC CAPACITOR	CCMCH150J50
C218–220	CERAMIC CAPACITOR	CKPUYY103N16
C221	AXIAL CERAMIC C.	CKPUYF223Z25
C222	AUDIO FILM CAPACITOR	CFTXA104J50
C223, 224	AXIAL CERAMIC C.	CKPUYF223Z25
C225	ELECTR. CAPACITOR	CEAS330M35
C226	AXIAL CERAMIC C.	CCPUSL470J50
C227	CERAMIC CAPACITOR	CKPUYB101K50
C228–230	AXIAL CERAMIC C.	CKPUYF223Z25
C231	ELECTR. CAPACITOR	CEAS330M35
C232	ELECTR. CAPACITOR	CEAS010M50
C233	CERAMIC CAPACITOR	CCDSL271J50
C234	ELECTR. CAPACITOR	CEAS4R7M50
C235	CERAMIC CAPACITOR	CKPUYY103N16
C236	ELECTR. CAPACITOR	CEAS470M16
C237	ELECTR. CAPACITOR	CEAS2R2M50
C238	CERAMIC CAPACITOR	CKCYB222K50
C239	CERAMIC CAPACITOR	CKDYF473Z50
C240	AUDIO FILM CAPACITOR	CFTXA104J50
C241	CERAMIC CAPACITOR	CKPUYY103N16
C242	ELECTR. CAPACITOR	CEAS1R5M50
C243	ELECTR. CAPACITOR	CEAS101M16
C244, 245	CERAMIC CAPACITOR	CCMCH150J50
C246	CERAMIC CAPACITOR	CKPUYB101K50
C247	CERAMIC CAPACITOR	CKPUYY103N16
C248	ELECTR. CAPACITOR	CEANP2R2M50
C249	CERAMIC CAPACITOR	CKCYF473Z50
C250	CAPACITOR (470p)	ACE1039
C251	ELECTR. CAPACITOR	CEAS3R3M50
C252	ELECTR. CAPACITOR	CEAS1R5M50
C253	ELECTR. CAPACITOR	CEASR22M50
C254	AXIAL CERAMIC C.	CKPUYF223Z25
C255	ELECTR. CAPACITOR	CEAS0R1M50
C256	ELECTR. CAPACITOR	CEAS330M35
C257, 258	CERAMIC CAPACITOR	CKMYB152K50
C259, 260	ELECTR. CAPACITOR	CEAS2R2M50
C261, 262	CERAMIC CAPACITOR	CKCYB332K50
C263	ELECTR. CAPACITOR	CEAS330M35
C264–266	ELECTR. CAPACITOR	CEAS470M16

Mark No.	Description	Parts No.
RESISTORS		
VR201	VR (4.7k)	ACP1042
R263	CARBON FILM RESISTOR	RD1/4PM151J
	Other resistors	RD1/8PM□□□J
OTHERS		
	ANTENNA TERMINAL 4–P	AKA1009
	AM RF TUNING BLOCK	AXX1011
X201	CERAMIC RESONATOR (450kHz)	ATF1027
X202	CRYSTAL RESONATOR (7.200MHz)	ASS1005

SWITCH ASSEMBLY

SEMICONDUCTORS		
D2062	LED (RED)	AEL1108
SWITCHES		
S2061	SWITCH (HIGH-SPEED COPY)	ASG1034
S2062	SWITCH (DOLBY NR ON/OFF)	ASH1014
RESISTORS		
	All resistors	RD1/8PM□□□J

DISPLAY ASSEMBLY

SEMICONDUCTORS		
IC102	OP–AMP IC	RC4558DXP
IC103	DISPLAY IC	BA6144
IC105, 106	AUDIO IC	BA3812L
IC2061	OP–AMP IC	RC4558DXP
IC2101–2104	DISPLAY IC	BA6144
IC51	3IN1 SYSTEM CONTROL MICRO-COMPUTER	PDG079A
Q111	N–FET	2SK246
Q113–115	TRANSISTOR	2SC1740S
Q2061	TRANSISTOR	XDC124ES
Q2065, 2066	TRANSISTOR	2SC1740S
Q2101–2104	TRANSISTOR	2SC1740S
Q51	TRANSISTOR	XDA143ES
Q52	TRANSISTOR	2SD438
Q53	TRANSISTOR	2SB560
Q54	TRANSISTOR	2SC3377
Q55	TRANSISTOR	XDA143ES

Mark No.	Description	Parts No.
Q56	TRANSISTOR	XDC143ES
Q57	TRANSISTOR	XDC124ES
Q58	TRANSISTOR	XDA143ES
Q59	TRANSISTOR	2SC1740S
D101	DIODE	1SS252
D2063	LED (RED)	AEL1108
D2105	LED	AEL1044
D51	DIODE	1SS252
D52	ZENER DIODE	RD10ESB1
D53	ZENER DIODE	RD3.6ESB1
D54	ZENER DIODE	RD11ESB2
D55–59	LED (RED)	AEL1108
D60	LED (GREEN)	AEL1130
D61	ZENER DIODE	RD6.2ESB
D62	DIODE	1SS252
D63	LED (RED)	AEL1108
D66	DIODE	1SS252
D67, 68	LED (RED)	AEL1108
D69	DIODE	1SS252
D71–73	ZENER DIODE	RD5.1ESB
SWITCHES		
S2063, 51	SWITCH (SUPER BASS, TAPE	ASG1034
S53–62	SWITCH (ST. CALL, SURROUND & STEREO WIDE, TUNING UP, POWER/ STANDBY, MEMORY, TUNER, PHONO, TUNING DOWN, CD, BAND)	ASG1034
S64, 65	SWITCH (FM MONO, VOCAL CANCEL)	ASG1034
COIL		
L51	AXIAL INDUCTOR	LAU220K
CAPACITORS		
C101, 102	CERAMIC CAPACITOR	CKCYX683M16
C103, 104	CERAMIC CAPACITOR	CGMYX392M25
C105, 106	CERAMIC CAPACITOR	CGMYB182M50
C107, 108	CERAMIC CAPACITOR	CKCYX153M16
C109, 110	ELECTROLYTIC CAPACITOR	CEASR15M50
C111, 112	CERAMIC CAPACITOR	CKMYB391K50
C113, 114	CERAMIC CAPACITOR	CKCYX183M16
C115, 116	CERAMIC CAPACITOR	CGMYX682M25
C117, 118	ELECTR. CAPACITOR	CEASR68M50
C119, 120	CERAMIC CAPACITOR	CCDSL101J50
C121, 122	CERAMIC CAPACITOR	CKCYX393M16
C123, 124	CERAMIC CAPACITOR	CCMSL121J50
C125, 126	ELECTR. CAPACITOR	CEAS4R7M50
C127, 128	CERAMIC CAPACITOR	CKMYB471K50
C129	CERAMIC CAPACITOR	CKMYB681K50
C131, 132	CERAMIC CAPACITOR	CKCYX473M16
C133	ELECTROLYTIC CAPACITOR	CEAS330M35
C134	ELECTR. CAPACITOR	CEASR33M50
C135	ELECTR. CAPACITOR	CEAS100M50
C137, 138	ELECTR. CAPACITOR	CEAS4R7M50
C139–142	ELECTR. CAPACITOR	CEAS470M16
C143, 144	CERAMIC CAPACITOR	CKCYF473Z50
C2061, 2062	MYLAR FILM CAPACITOR	CQMA153J50
C2063, 2064	MYLAR FILM CAPACITOR	CQMA823J50
C2101	CERAMIC CAPACITOR	CKCYX473M16
C2103, 2104	CERAMIC CAPACITOR	CKCYX183M16
C2105	ELECTR. CAPACITOR	CEASR22M50
C2106	ELECTR. CAPACITOR	CEAS100M50
C2107, 2108	CERAMIC CAPACITOR	CKCYB682K50
C2109	CERAMIC CAPACITOR	CKCYX333M16
C2110	ELECTR. CAPACITOR	CEAS100M50
C2111, 2112	CERAMIC CAPACITOR	CKCYB272K50
C2113	CERAMIC CAPACITOR	CKCYX223M25
C2114	ELECTR. CAPACITOR	CEAS100M50
C2115, 2116	CERAMIC CAPACITOR	CKCYB821K50
C2117	CERAMIC CAPACITOR	CKCYB332K50
C2118	ELECTR. CAPACITOR	CEAS100M50
C50	ELECTR. CAPACITOR	CEAS4R7M50
C51	CAPACITOR (47000/5.5)	ACH1135
C52	CERAMIC CAPACITOR	CKCYF473Z50
C53	ELECTR. CAPACITOR	CEAS470M16
C54	CERAMIC CAPACITOR	CKCYX104M16
C55, 56	ELECTR. CAPACITOR	CEAS4R7M50
RESISTORS		
VR101–105	VR (100k-B5 × 2)	ACU1030
R165	CARBON FILM RESISTOR	RD1/4PM101J
R2101, 2108	CARBON FILM RESISTOR	RD1/4PM390J
R2115, 2122	CARBON FILM RESISTOR	RD1/4PM390J
R2129	CARBON FILM RESISTOR	RD1/4PM390J
R51–55	CARBON FILM RESISTOR	RD1/4PM270J
⚠ R79	METAL OXIDE RESISTOR	RS2LMF390J
R91	CARBON FILM RESISTOR	RD1/4PM220J
	Other resistors	RD1/8PM□□□J
OTHERS		
	REMOTE RECEIVER UNIT	AXX1023
V51	FL TUBE	AAV–039
X51	CERAMIC RESONATOR (4.00MHz)	ASS1025

Mark No.	Description	Parts No.
DOLBY ASSEMBLY		
SEMICONDUCTORS		
IC1201–1204	OP–AMP IC	RC4558DXP
IC1205	LOGIC IC	XRU4066B
IC1301	DOLBY–B IC	CXA1100P
IC1401	DIGITAL ECHO IC	M50197P
Q1204	TRANSISTOR	XDC143ES
Q1301–1305	TRANSISTOR	2SC1740S
Q1307	TRANSISTOR	2SC1740S
Q1309, 1310	TRANSISTOR	2SC1740S
D1301–1303	DIODE	1SS252
D1401–1404	DIODE	1SS252
COILS		
F1301, 1302	DOLBY FILTER	ATF1064
L1301, 1302	AXIAL INDUCTOR	LAU221K
L1401	AXIAL INDUCTOR	LAU221K
CAPACITORS		
C1203, 1204	CERAMIC CAPACITOR	CKCYX683M16
C1205, 1206	ELECTR. CAPACITOR	CEASR33M50
C1207, 1208	CERAMIC CAPACITOR	CKCYB272K50
C1209–1214	CERAMIC CAPACITOR	CKCYB561K50
C1215, 1216	ELECTR. CAPACITOR	CEAS4R7M50
C1217–1219	CERAMIC CAPACITOR	CKCYX183M16
C1220	CERAMIC CAPACITOR	CCCSL101J50
C1221, 1222	ELECTR. CAPACITOR	CEAS470M16
C1223, 1224	ELECTR. CAPACITOR	CEAS4R7M50
C1301–1304	ELECTR. CAPACITOR	CEAS010M50
C1305, 1306	ELECTR. CAPACITOR	CEASR68M50
C1307, 1308	ELECTR. CAPACITOR	CEAS2R2M50
C1309	ELECTR. CAPACITOR	CEAS100M50
C1310	ELECTR. CAPACITOR	CEAS220M50
C1311	ELECTR. CAPACITOR	CEAS470M16
C1312	ELECTR. CAPACITOR	CEAS101M10
C1313	CERAMIC CAPACITOR	CKCYF473Z50
C1315, 1316	CERAMIC CAPACITOR	CKCYX103M16
C1317, 1318	CERAMIC CAPACITOR	CKCYX333M16
C1319, 1320	CERAMIC CAPACITOR	CKCYX104M16
C1323, 1324	ELECTR. CAPACITOR	CEAS4R7M50
C1325, 1326	ELECTR. CAPACITOR	CEAS010M50
C1401	CERAMIC CAPACITOR	CKCYX104M16
C1402	ELECTR. CAPACITOR	CEAS010M50
C1403	CERAMIC CAPACITOR	CKCYB562K50
C1404	CERAMIC CAPACITOR	CKCYB561K50
C1405	ELECTR. CAPACITOR	CEANP010M50
C1406	CERAMIC CAPACITOR	CKCYX103M16
C1407	ELECTR. CAPACITOR	CEAS010M50
C1408	CERAMIC CAPACITOR	CKCYX103M16
C1409	CERAMIC CAPACITOR	CGMYX562M25
C1410	CERAMIC CAPACITOR	CKCYB561K50
C1411–1414	CERAMIC CAPACITOR	CKCYX104M16
C1415	ELECTR. CAPACITOR	CEAS101M10
C1416	CERAMIC CAPACITOR	CKCYX104M16
C1417	ELECTR. CAPACITOR	CEAS470M16
C1418	ELECTR. CAPACITOR	CEAS101M10
C1419, 1420	CERAMIC CAPACITOR	CKCYX104M16
RESISTORS		
VR1301, 1302	VR	VRTM6H203
VR1303, 1304	VR	VRTM6H104
R1202	CARBON FILM RESISTOR	RD1/4PM221J
	Other resistors	RD1/8PM□□□J
OTHERS		
CN110	CONNECTOR (12P)	KPE12
CN2104	CONNECTOR (15P)	KPE15
X1401	CERAMIC OSCILLATOR (3.27MHz)	ASS1016
POWER ASSEMBLY		
SEMICONDUCTORS		
IC301	OP–AMP IC	RC4558DXP
IC302	LOGIC IC	MC14052BCP
IC303, 304	OP–AMP IC	RC4558DXP
IC306	OP–AMP IC	RC4558DXP
IC401	OP–AMP IC	RC4558DXP
IC402	OP–AMP IC	M5220P
IC404	LOGIC IC	XRU4066B
IC501, 502	IC PROTECTOR	ICP–N38
IC601, 602	REGULATOR IC	MC7812CT
Q2401, 2402	TRANSISTOR	2SC1740S
Q2403, 2404	TRANSISTOR	XDC143ES
Q2407	TRANSISTOR	XDA124ES
Q2408	TRANSISTOR	2SC1740S
Q2409	TRANSISTOR	XDC124ES
Q2410	TRANSISTOR	2SC1740S
Q305, 306	TRANSISTOR	2SC1740S
Q307	TRANSISTOR	RN2201
Q401, 402	N–FET	2SK373
Q403	TRANSISTOR	2SC1740S
Q405	TRANSISTOR	2SD438
Q406	TRANSISTOR	2SC1740S
Q407	TRANSISTOR	XDA124ES
Q408	TRANSISTOR	XDC124ES
Q411, 412	TRANSISTOR	2SC1740S
Q501–504	TRANSISTOR	2SA992
Q505, 506	TRANSISTOR	2SC1845
Q507, 508	TRANSISTOR	2SC1740S
Q509, 510	TRANSISTOR	2SD1276A
Q511, 512	TRANSISTOR	2SB950A
Q601	TRANSISTOR	2SA1048
Q602	TRANSISTOR	2SC1845
Q605	TRANSISTOR	2SC1740S

Mark No.	Description	Parts No.
Q606	TRANSISTOR	2SA1048
Q607, 608	TRANSISTOR	2SA1515
Q609	TRANSISTOR	XDC124ES
Q610	TRANSISTOR	2SB560
Q611	TRANSISTOR	2SB834
Q612, 613	TRANSISTOR	2SC1740S
Q614	TRANSISTOR	2SC3377
Q615, 616	TRANSISTOR	XDC124ES
Q621, 622	TRANSISTOR	2SC1740S
D303	DIODE	1SS252
D401–407	DIODE	1SS252
D408, 409	ZENER DIODE	RD5.1ESB
D501, 502	DIODE	1SS252
D503, 504	ZENER DIODE	RD4.3ESB
D601, 602	ZENER DIODE	UZ–12BS
D603	DIODE	1SS252
D604	DIODE	D3SBA20 (A)
D605–608	DIODE	1SR139–400
D609	ZENER DIODE	RD5.6ESB
D610	ZENER DIODE	RD13ESB
D611, 612	DIODE	1SR139–400
D613	ZENER DIODE	RD20ESB
D614–618	DIODE	1SS252
SWITCH & RELAY		
S201	SLIDE SWITCH (9k/10k)	ASH1027
RY601	RELAY	ASR1035
RY602	RELAY	ASR1027
COILS		
L401, 402	INDUCTOR	LTA392J
L403, 404	INDUCTOR	LTA822J
L410	INDUCTOR	LTA102J
L501, 502	COIL	ATH–133
CAPACITORS		
C2301	ELECTR. CAPACITOR	CEAS100M50
C2401, 2402	MYLAR FILM CAPACITOR	CQMA822J50
C301, 302	CERAMIC CAPACITOR	CCMSL101J50
C303, 304	CERAMIC CAPACITOR	CKMYB152K50
C305, 306	CERAMIC CAPACITOR	CKCYB562K50
C307, 308	ELECTR. CAPACITOR	CEAS3R3M50
C309	CERAMIC CAPACITOR	CKCYX104M16
C310	ELECTR. CAPACITOR	CEAS220M50
C311, 312	ELECTR. CAPACITOR	CEAS470M16
C313, 314	ELECTR. CAPACITOR	CEAS220M50
C332, 333	CERAMIC CAPACITOR	CKCYF103Z50
C334, 335	CERAMIC CAPACITOR	CKCYF473Z50
C336	CERAMIC CAPACITOR	CCMSL680J50
C337	ELECTR. CAPACITOR	CEAS100M50
C338	ELECTR. CAPACITOR	CEAS010M50
C339	MYLAR FILM CAPACITOR	CQMA103K50

Mark No.	Description	Parts No.
C340	CERAMIC CAPACITOR	CKCYF473Z50
C401, 402	ELECTR. CAPACITOR	CEAS100M50
C403, 404	MYLAR FILM CAPACITOR	CQMA153J50
C405, 406	ELECTROLYTIC CAPACITOR	CEAS330M35
C407, 408	MYLAR FILM CAPACITOR	CQMA683J50
C409, 410	MYLAR FILM CAPACITOR	CQMA272J50
C411, 412	CERAMIC CAPACITOR	CKMYB681K50
C413, 414	CERAMIC CAPACITOR	CCCSL271K500
C415, 416	CERAMIC CAPACITOR	CCMSL100D50
C417, 418	CERAMIC CAPACITOR	CKMYB471K50
C419, 420	ELECTROLYTIC CAPACITOR	CEAS330M35
C421, 422	MYLAR FILM CAPACITOR	CQMA682J50
C423, 424	ELECTR. CAPACITOR	CEAS470M16
C427	CERAMIC CAPACITOR	CKCYF473Z50
C428	ELECTR. CAPACITOR	CEAS220M50
C433	ELECTR. CAPACITOR	CEAS4R7M50
C437–440	CERAMIC CAPACITOR	CKCYX104M16
C450	ELECTR. CAPACITOR	CEAS470M16
C451	MYLAR FILM CAPACITOR	CQMA473K50
C452	MYLAR FILM CAPACITOR	CQMA103K400
C453	MYLAR FILM CAPACITOR	CQMA333K250
C501, 502	ELECTR. CAPACITOR	CEAS2R2M50
C503, 504	CERAMIC CAPACITOR	CKCYB222K50
C505, 506	ELECTR. CAPACITOR	CEAS470M25
C507, 508	CERAMIC CAPACITOR	CCMSL680J50
C509, 510	ELECTR. CAPACITOR	CEAS470M16
C511, 512	CERAMIC CAPACITOR	CKMYB102K50
C513, 514	CERAMIC CAPACITOR	CCMSL101J50
C515–518	MYLAR FILM CAPACITOR	CQMA823K50
C519, 520	CERAMIC CAPACITOR	CCMSL680J50
C521–524	CERAMIC CAPACITOR	CCMSL470J50
C525	CERAMIC CAPACITOR	CKCYX104M16
C601	ELECTR. CAPACITOR	CEAS100M50
C603	CKA (0.01/AC250V)	ACG1005
C604–606	ELECTR. CAPACITOR (2200/42)	ACH1009
C607	ELECTROLYTIC CAPACITOR	CEAS102M35
C608–611	ELECTR. CAPACITOR	CEAS470M16
C612	ELECTR. CAPACITOR	CEAS221M16
C613	ELECTR. CAPACITOR	CEAS470M16
C614	ELECTR. CAPACITOR	CEAS101M50
C615	ELECTR. CAPACITOR	CEAS101M63
C617	ELECTR. CAPACITOR	CEAS470M16
C618, 619	CKA (0.01/AC400V)	ACG1003
C620	CKA (0.01/AC250V)	ACG1005

Mark	No.	Description	Parts No.
	C621–624	ELECTROLYTIC CAPACITOR	CEAS472M25
	C630	ELECTR. CAPACITOR	CEAS221M10
RESISTORS			
	VR2301	VARIABLE (10k-B × 1)	ACS1064
	VR2401, 2402	VR	VRTM6V103
	VR2403	VR	VRTM6V104
	VR2404	VR	VRTM6V502
	VR301	VARIABLE (10k-B × 1)	ACS1064
	VR401	VR	VRTM6V104
	VR402	VR	VRTM6V502
	R441	CARBON FILM RESISTOR	RD1/4PM471J
⚠	R442	METAL OXIDE RESISTOR	RS1LMF102J
	R451	METAL OXIDE RESISTOR	RS2LMF470J
	R454	CARBON FILM RESISTOR	RD1/4PM180J
	R505, 506	CARBON FILM RESISTOR	RD1/4PM222J
	R507, 508	CARBON FILM RESISTOR	RD1/4PM123J
	R515–518	CARBON FILM RESISTOR	RD1/4PM222J
	R523, 524	CARBON FILM RESISTOR	RD1/4PMF470J
	R525, 526	CARBON FILM RESISTOR	RD1/4PM221J
	R527–530	METAL OXIDE RESISTOR	RS2LMFR68J
	R531, 532	CARBON FILM RESISTOR	RD1/4PMF100J
	R535, 536	CARBON FILM RESISTOR	RD1/4PMFL100J
	R573, 574	METAL OXIDE RESISTOR	RS2LMF010J
	R601, 602	CARBON FILM RESISTOR	RD1/4PM100J
	R603	METAL OXIDE RESISTOR	RS2LMF102J
	R616	METAL OXIDE RESISTOR	RS2LMFR22J
	R621	METAL OXIDE RESISTOR	RS2LMF101J
	R624	METAL OXIDE RESISTOR	RS2LMF821J
	R625	METAL OXIDE RESISTOR	RS2LMF221J
	R626	METAL OXIDE RESISTOR	RS2LMF181J
	R627	CARBON FILM RESISTOR	RD1/4PM682J
	R633	METAL OXIDE RESISTOR	RS2LMF221J
	R634	METAL OXIDE RESISTOR	RS2LMF681J

Mark	No.	Description	Parts No.
	R637	CARBON FILM RESISTOR	RD1/4PM3R9J
	R638	METAL OXIDE RESISTOR	RS2LMF101J
	R639, 640	CARBON FILM RESISTOR	RD1/4PM100J
		Other resistors	RD1/8PM□□□J
OTHERS			
		PIN JACK 2P (SURROUND)	AKB1100
		PIN JACK 4P (CD, PHONO)	AKB1124
		JACK (TURNTABLE)	AKN–203
		JACK (CONTROL)	AKN–207
		JACK (MIC)	AKN1017
		AC SOCKET 1–P	AKP1060
	CN	SPEAKER TERMINAL 2–P	AKE1031
	CN107	CONNECTOR (10P)	KPE10
	CN108	CONNECTOR (11P)	KPE11
	CN111	CONNECTOR (15P)	KPE15

HEADPHONE ASSEMBLY

RESISTORS

⚠	R533, 534	METAL OXIDE RESISTOR	RS1LMF331J

OTHERS

	CN	JACK (HEADPHONE)	AKN1027

TRANSE ASSEMBLY

TRANSE assembly has no service part.

4. ADJUSTMENTS

4.1 TUNER BLOCK

4.1.1 FM Tuner Block

- Set to the FM band.
- Connect the tuner as shown in Fig. 4–1.
- The adjustment locations and the TP terminals are in the TUNER assembly.

**1 : Stereo modulation : Main 1kHz L+R ±68.25kHz dev.*
Pilot 19kHz ±6.75kHz dev.

Step No.	Adjustment	FM SG (1kHz±75kHz dev.)		Reception frequency display	Adjustment location	Specifications
		Frequency (MHz)	Level (dBμV)			
1	Adjustment of FM sensitivity	98	Low input	98MHz	T201	Adjust to maximize the output voltage of TP210 (Lch OUT) or TP212 (Rch OUT).
2	Confirmation of 87.5MHz VT (tuning voltage)	No input		87.5MHz	—	Confirm that TP201 is 3.5V ±1.5V.
3	Confirmation and adjustment of 108MHz VT (tuning voltage)			108MHz	L201	Confirm that TP201 is 8.7V $^{+1.3}_{-2}$ V. Adjust at L201 only if the voltage is 10V or more.
4	Adjustment of T-METER	98	60	98MHz	L202	Adjust so that the potential difference between TP202 and TP203 is 0V ±10mV.
5	Adjustment of the TUNED IND. activation level.	98	See the table on the right.	98MHz	R265	R265 is either mounted or removed at adjustment before shipment. Refer to the table below and mount or remove R265 to align with the point at which the TUNED IND. lights up.
6	Adjustment of MPX VCO	No modulation	80	98MHz	VR201	Adjust so that the frequency of TP205 is 76kHz ±100Hz.
7	Adjustment of distortion	98 *1 (Stereo)	60	98MHz	T202	If distortion of TP210 (Lch OUT) or TP212 (Rch OUT) exceeds 1.5%, then adjust it at T202 to be 1.5% or less.

R265	Input level
Required	25dBμV (±15dB)
Not required	More than 25dBμV (+15dB)

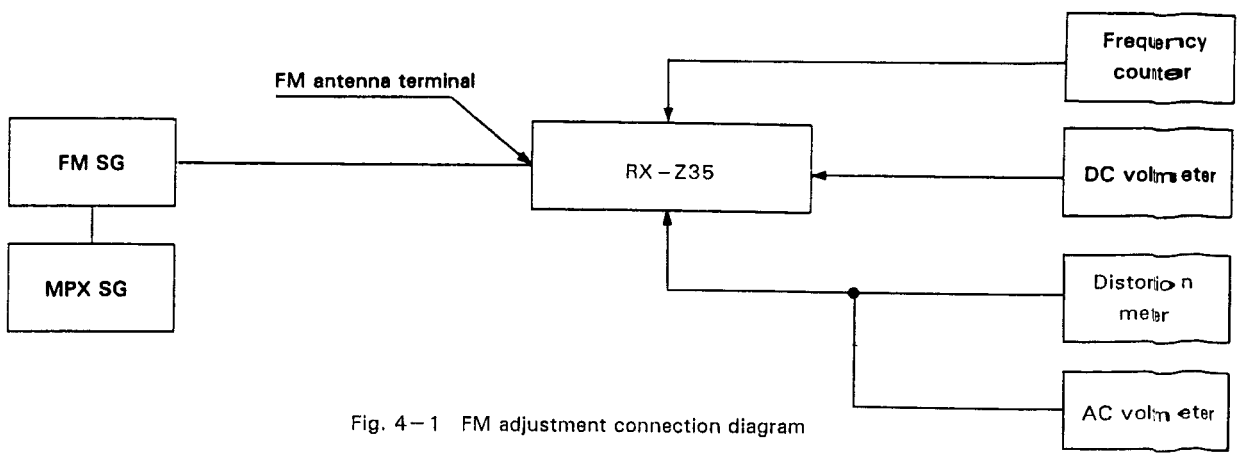

Fig. 4–1 FM adjustment connection diagram

4.1.2 AM Tuner Block

- Set to the AM band.
- Connect the tuner as shown in Fig. 4–2.
- The adjustment locations and the TP terminals are in the TUNER assembly.

Step No.	Adjustment	AM SG (400Hz 30% Mod.)		Reception frequency display	Adjustment location	Specifications
		Frequency (kHz)	Level (dBμV/m)			
1	Adjustment of the TUNED IND. activation level.	1000 *2	See the table on the right.	1000kHz	R232	R232 is either mounted or removed at adjustment before shipment. Refer to the table below and mount or remove R232 to align with the point at which the TUNED IND. lights up.

R232	Input level
Required	60dBμV/m or less
Not required	More than 60dBμV/m

**2 : This frequency applies to the areas classified as 10kHz step. For YPW and the areas of 9kHz step, perform adjustment at 999kHz.*

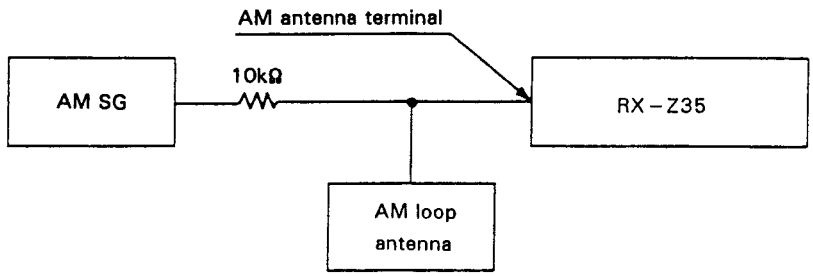

Fig. 4–2 AM adjustment connection diagram

4.2 DECK BLOCK

4.2.1 Adjustment of Mechanical Section

- Test tape : STD–301 (3kHz 30min)
- Setting of high speed mode : Short-circuit TP409 and TP410 of the POWER assembly. To release the mode, disconnect the short circuit.

1. Adjustment of tape speed

No.	Mode	Input signal & Test tape	Adjustment location		Measuring location	Adjustment value	Remarks
1	PLAY	Playback the STD-301 tape to 3kHz.	Deck I	POWER assembly VR402	POWER assembly TP401 (Lch)	Press the PLAY button and adjust the frequency to 3010Hz ±10Hz. Make sure that the wow and flutter is within 0.3%.	
2	PLAY (High speed mode)			POWER assembly VR2404		Change to the high speed mode and press the PLAY button. Adjust the frequency to 6020Hz ±20Hz.	

4.2.2 Adjustment of Electric Section

■ Check and conduct the following before adjusting the electric section.

1. Adjustment of tape speed has been completed.
2. Clean and demagnetize the head using a head eraser.
3. When measured, the level should be 0dBV = 1 Vrms.
4. Use side A of the specified tape for adjustment.
   STD-331E : For adjustment of playback system.
   STD-630 : NORMAL blank tape
5. Prepare the following measuring devices :
   AC millivoltmeter, Low-frequency oscillator, Attenuator, Oscilloscope
6. Adjust both L and R channels, unless specified otherwise.
7. Set the DOLBY NR switches to OFF, VOCAL CANCEL to OFF (RX–Z35/SDXJ, YPWXJ) and MIC MIX to MIN (RX–Z35/SDXJ, YPWXJ).
8. Warm up the unit for several minutes before adjustment. Especially before adjusting the frequency characteristics of recording and playback, warm up for 3 to 5 minutes in REC/PLAY mode.
9. Make sure to follow the proper order of the adjustment procedure. Any change in the order may cause an improper result.

List of Adjustment

Deck I
1. Head azimuth adjustment
2. Playback level adjustment

Deck II
1. Head azimuth adjustment
2. Playback level adjustment
3. Recording level and bias level adjustment

NOTE :
As the reference recording level is 250nwb/m for STD–331E, the recording level will be higher by 4 dB for STD–331B (160nwb/m). When adjusting, pay carefull attention to the type of tape used.

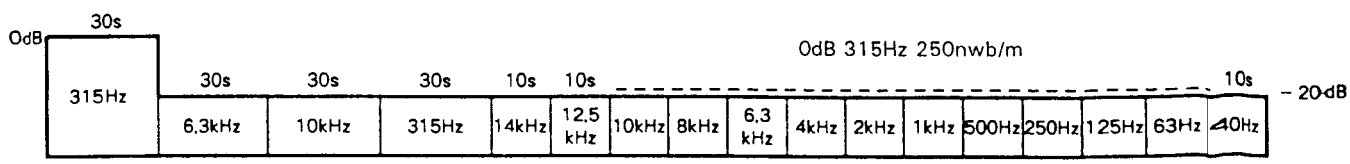

Fig. 4–3 Test tape STD–331E

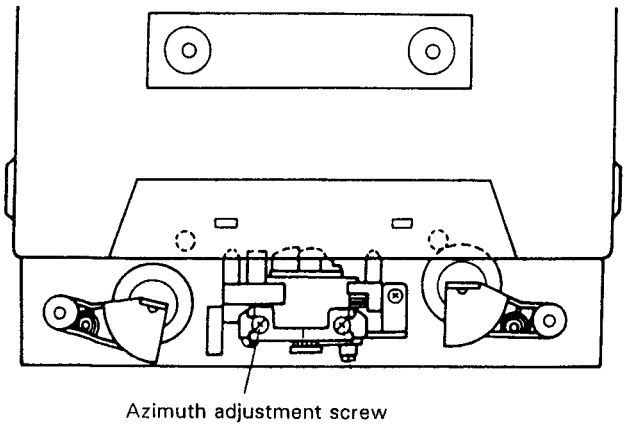

Fig. 4–4 Head azimuth adjustment

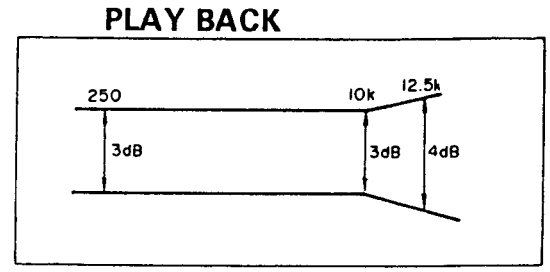

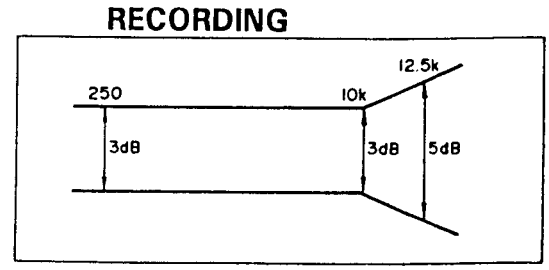

Fig. 4–5 Frequency characteristics

■ Head Adjustment of Deck I

1. Head Azimuth Adjustment

Procedure	Tape selector	Mode	Input signal/test tape	Adjustment location	Measuring location	Adjustment value	Remarks
1	NORM	PLAY	Playback the test tape STD–331E (10kHz, –20dB).	Head azimuth adjustment screw (Fig. 4–4)	POWER assembly TP401 (Lch) TP403 (Rch)	Adjust so that the signal level is at maximum and the phase difference is zero (0).	Lock the screw with screw lock after completing adjustment.

2. Playback Level Adjustment

- Be sure to make a careful adjustment, as the adjustment determines the DOLBY NR level for playback.

Procedure	Tape selector	Mode	Input signal/test tape	Adjustment location	Measuring location	Adjustment value	Remarks
1	NORM	PLAY	Playback the test tape STD–331E (315Hz, 0dB).	DOLBY assembly VR1301 (Lch) VR1302 (Rch)	POWER assembly TP401 (Lch) TP403 (Rch)	–1.2dBV ±0.5dB	

■ Head Adjustment of Deck II

1. Head Azimuth Adjustment

Procedure	Tape selector	Mode	Input signal/test tape	Adjustment location	Measuring location	Adjustment value	Remarks
1	NORM	PLAY	Playback the test tape STD–331E (10kHz, –20dB).	Head azimuth adjustment screw (Fig. 4–4)	POWER assembly TP401 (Lch) TP403 (Rch)	Adjust so that the signal level is at maximum and the phase difference is zero (0).	Lock the screw with screw lock after completing adjustment.

2. Playback Level Adjustment

- Be sure to make a careful adjustment, as the adjustment determines the DOLBY NR level for playback.

Procedure	Tape selector	Mode	Input signal/test tape	Adjustment location	Measuring location	Adjustment value	Remarks
1	NORM	PLAY	Playback the test tape STD–331E (315Hz, 0dB).	DOLBY assembly VR1303 (Lch) VR1304 (Rch)	POWER assembly TP401 (Lch) TP403 (Rch)	–1.2dBV ±0.5dB	

3. Recording Level and Bias Level Adjustment

- Before starting adjustment, turn VR401 and VR2403 by 45 degrees counterclockwise from the mechanical center.

Procedure	Tape selector	Mode	Input signal/test tape	Adjustment location	Measuring location	Adjustment value	Remarks
1	NORM	REC PAUSE	Inputs 315Hz to the CD RCA input terminal. Set the function to CD. Set test tape STD–630.	Input signal level	POWER assembly TP401 (Lch) TP403 (Rch)	Set the input signal to be –25.2dBV.	
2		REC/ PLAY	Record and playback the test tape STD–630.	POWER assembly VR2401 (Lch) VR2402 (Rch)		Repeat recording/playback until the playback level of 315Hz is –25.2dBV ±0.5dBV.	
3		REC PAUSE	Inputs 10kHz to the CD RCA input terminal. Set the function to CD. Set test tape STD–630.	Input signal level		Set the input signal to be –25.2dBV.	
4		REC/ PLAY	Record and playback the test tape STD–630.	POWER assembly VR401 (Lch) VR2403 (Rch)		Repeat recording/playback until the playback level of 10kHz is –25.2dBV ±0.5dBV.	
5	Repeat steps 1 to 4 and attain the best adjustment.						

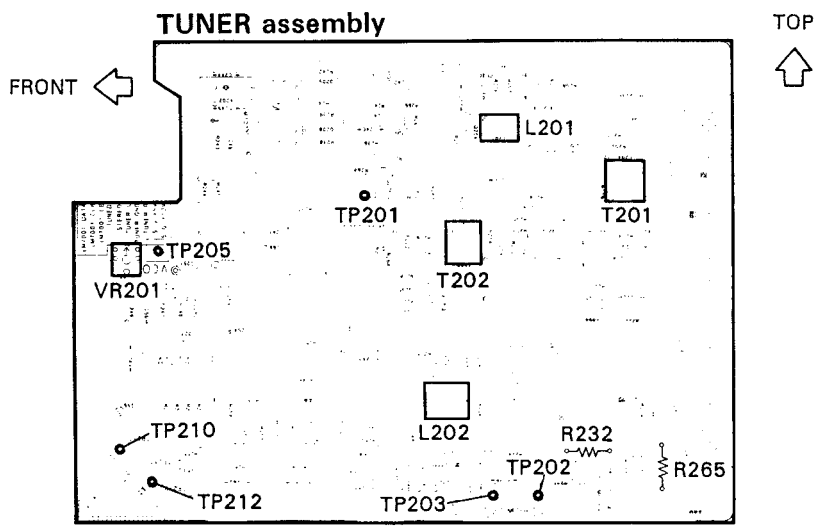

Fig. 4–6–1 Adjustment points

POWER assembly

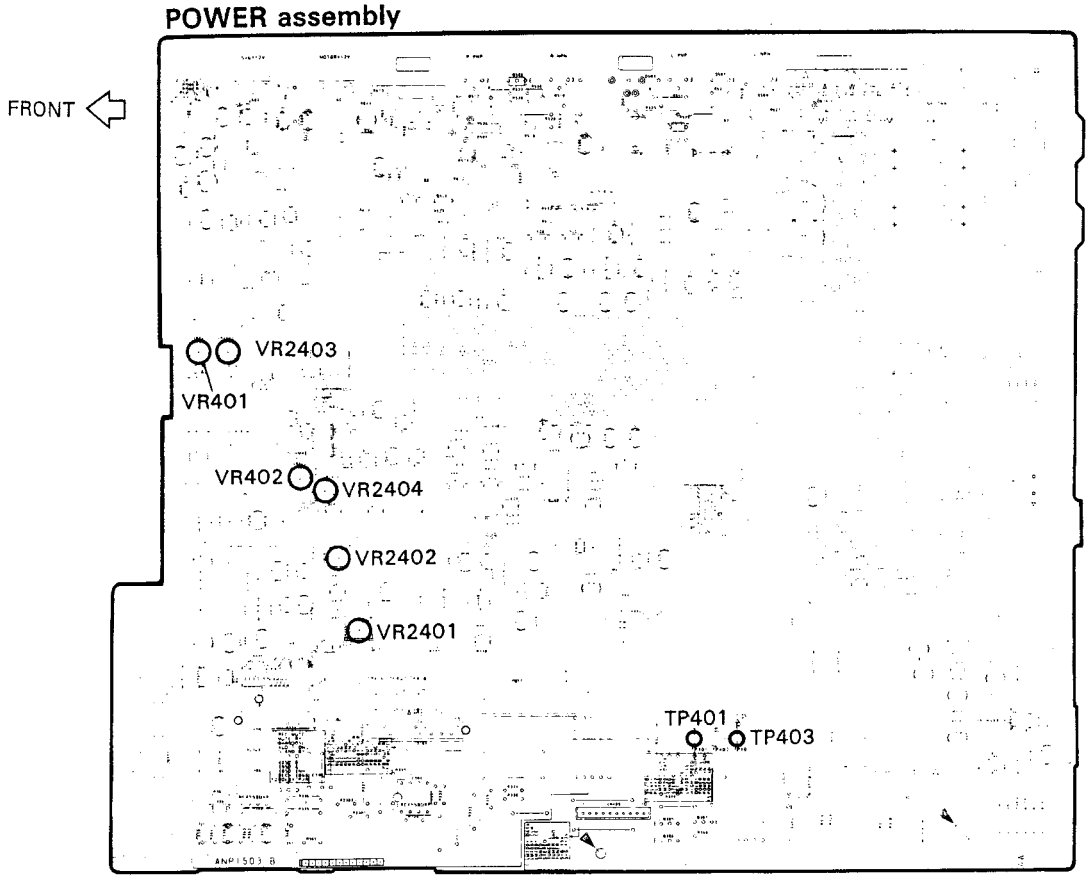

DOLBY assembly

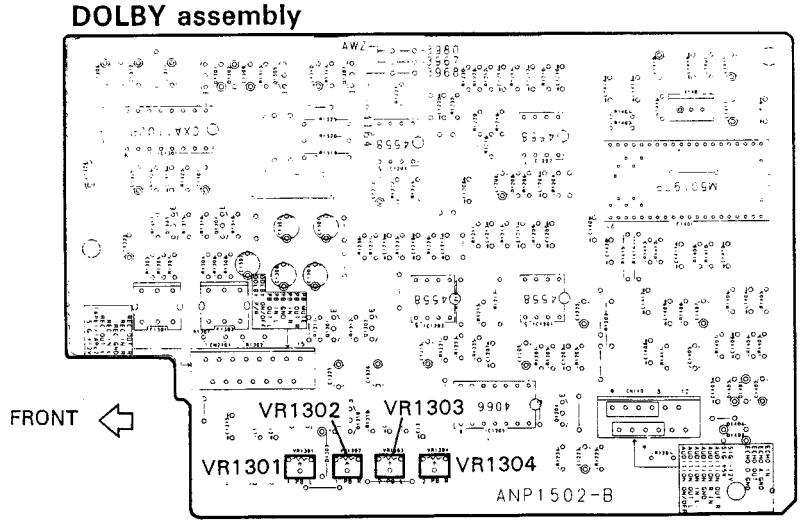

Fig. 4–6–2 Adjustment points

4. REGLAGE

4.1 BLOC TUNER

5.1.1 Bloc Tuner FM

- Régler sur la gamme FM.
- Connecter le tuner de la manière illustrée à la Fig. 4–1.
- Les points de réglage et la borne TP sont situés dans l'ensemble TUNER.

**1 :*
Modulation stéréo : Principal 1kHz L+R ±68,25kHz dev.
Pilote 19kHz ±6,75kHz dev.

Etape No.	Réglage	FM SG (1kHz±75kHz dév.)		Affichage de fréquence de réception	Liea de réglage	Caractéristiques
		Fréquence (MHz)	Niveau (dBμV)			
1	Réglage de la sensibilité FM	98	Entrée faible	98MHz	T201	Régler de manière à maximiser la tension de sortie de TP210 (SORTIE Canal L) et de TP212 (SORTIE canal R).
2	Confirmation de VT (tension d'accord) à 87,5MHz.	Pas d'entrée		87,5MHz	—	Confirmer que TP201 est 3,5V ±1,5V.
3	Confirmation et réglage de VT (tension d'accord) à 108MHz.			108MHz	L201	Confirmer que TP201 est 8,7V $^{+1,3}_{-2}$ V. Régler au niveau de L201 uniquement si la tension est égale ou supérieure à 10V.
4	Réglage de T–METER	98	60	98MHz	L202	Régler de manière que la différence de potentiel entre TP202 et TP203 soit de 0V ±10mV.
5	Réglage du niveau d'activation de l'indicateur d'accord TUNED.	98	Voir la table ci-contre.	98MHz	R265	R265 est soit posé soit déposé lors du réglage en usine. Se reporter au tableau suivant et poser ou déposer R265 pour aligner le point auquel l'indicateur d'accord TUNED s'allume.
6	Réglage de MPX VCO	Pas de modulation	80	98MHz	VR201	Régler de manière que la fréquence de TP205 soit 76kHz ±100Hz.
7	Réglage de la distorsion	98 *1 (Stéréo)	60	98MHz	T202	Si la distorsion entre TP210 (SORTIE Canal L) et TP212 (SORTIE canal R) dépasse 1.5%, régler au niveau de T202 de manière qu'elle soit égale ou inférieure à 1.5%.

R265	Niveau d'entrée
Requis	25dBμV (±15dB)
Non requis	25dBμV (+15dB) ou plus

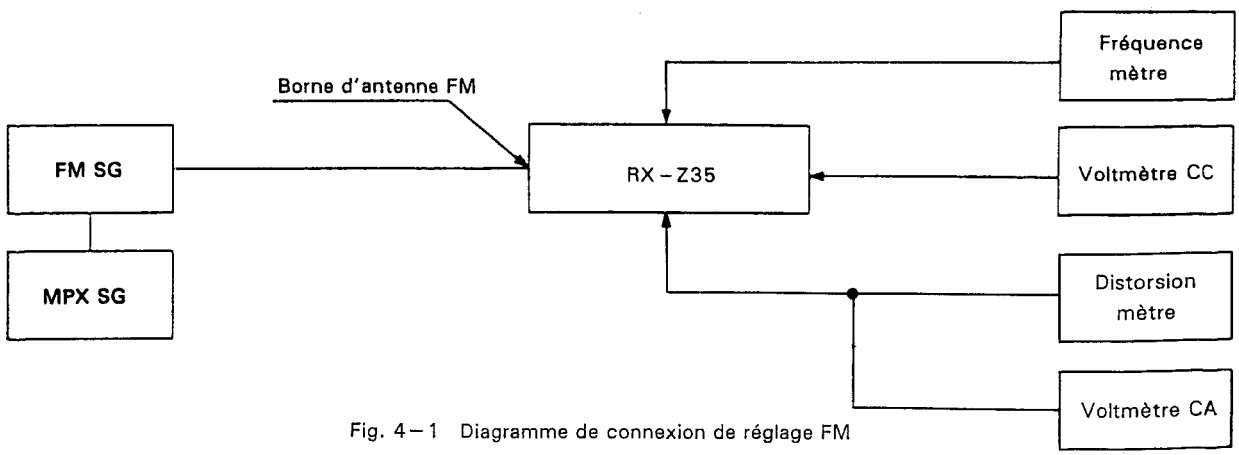

Fig. 4–1 Diagramme de connexion de réglage FM

4.1.2 Bloc Tuner AM

- Régler sur la gamme AM
- Connecter le tuner de la manière illustrée à la Fig. 4–2.
- Les points de réglage sont situés dans l'ensemble TUNER.

Etape No.	Réglage	AM SG (400Hz 30% Mod.)		Affichage de fréquence de réception	Liea de réglage	Caractéristiques
		Fréquence (kHz)	Niveau (dBμV/m)			
1	Réglage du niveau d'activation de l'indicateur d'accord TUNED.	1000 *2	Voir la table ci-contre.	1000kHz	R232	R232 est soit posé soit déposé lors du réglage en usine. Se reporter au tableau suivant et poser ou déposer R232 pour aligner le point auquel l'indicateur d'accord TUNED s'allume.

R232	Niveau d'entrée
Requis	60dBμV/m ou moins
Non requis	Plus de 60dBμV/m

**2 : Cette fréquence s'applique aux zones d'intervalle de 10kHz. Pour YPW et les zones d'intervalle de 9kHz, effectuer le réglage à 999kHz.*

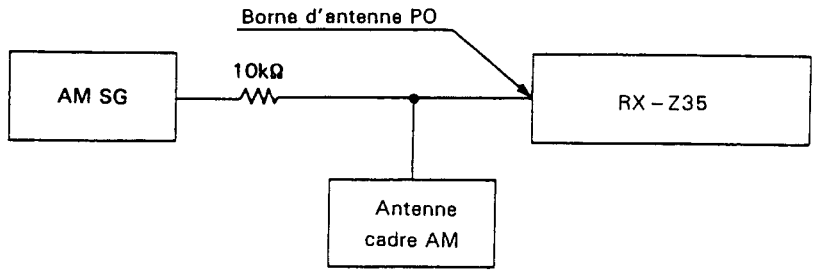

Fig. 4–2 Diagramme de connexion de réglage AM

4.2 BLOC AMPLI PLATINE

4.2.1 Réglages des parties mécaniques

- Bande d'étalonnage : STD–301 (3kHz, 30min.)
- Réglage du mode de vitesse double : Court-circuiter TP409 et TP410 de l'ensemble POWER. Pour libérer le mode, déconnecter le court-circuit.

1. Réglage de la vitesse de bande

No.	Mode	Signal appiligeé/bande d'étalonnage	Emplacement du réglage		Emplacement du point de mesure	Valeur relevée	Dbservations
1	PLAY	Reproduire la bande STD-301 par 3kHz.	Platine I	Ensemble POWER VR402	Ensemble POWER TP401 (can. G)	Appuyer sur la touche PLAY et régler la fréquence sur 3010Hz ±10Hz. Vérifier que le pleurage et scintillement est dans la limite de 0,3%.	
2	PLAY (Mode de vitesse double)			Ensemble POWER VR2404		Passer au mode vitesse double et appuyer sur la touche PLAY. Régler la fréquence à 6020Hz ±20Hz.	

4.2.2 Réglages des parties électriques

■ Vérifier les points suivants et effectuer les opérations suivantes avant procéder aux réglages des parties électriques.

1. Le réglage de la vitesse de bande a été complété.
2. Nettoyer et démagnétiser la tête avec un démagnétiseur de tête.
3. Lors de la mesure, le niveau doit être de 0 dBV = 1 Vepp.
4. Utiliser la face A de la bande spécifiée pour le réglage.
   STD–331E : Pour le réglage du système de lecture.
   STD–630 : Bande vierge NORMAL
5. Préparer les instruments de mesure suivants:
   Millivoltmètre CA, oscillateur à basse fréquence, éatténnateur et oscilloscope.
6. Régler les deux canaux L (gauche) et R (droit), sauf spécification contraire.
7. Régler les interrupteurs DOLBY NR sur OFF, VOCAL CANCEL sur OFF (RX–Z35/SDXJ, YPWXJ) et MIC MIX sur MIN (RX–Z35/SDXJ, YPWXJ).
8. Laisser chauffer l'appareil pendant plusieurs minutes avant le réglage. En particulier avant d'effectuer le réglage de la réponse en fréquence d'enregistrement et de lecture, laisser chauffer l'appareil pendant 3 à 5 minutes dans le mode d'enregistrement/lecture (REC/PLAY).
9. Toujours suivre l'ordre spécifié de la méthode de réglage. Tout changement de l'ordre peut provoquer des résultats incorrects.

Liste des réglages

Platine I

1. Azimut de la tête
2. Niveau de lecture

Platine II

1. Azimut de la tête
2. Niveau de lecture
3. Réglage du niveau d'enregistrement et du niveau de polarisation.

REMARQUE :
Le niveau d'enregistrement de référence étant de 250 nwb/m pour le STD-331E, le niveau d'enregistrement sera supérieur de 4 dB pour le STD-331B (160nwb/m). Pour le réglage, tenir compte du type de bande utilisé.

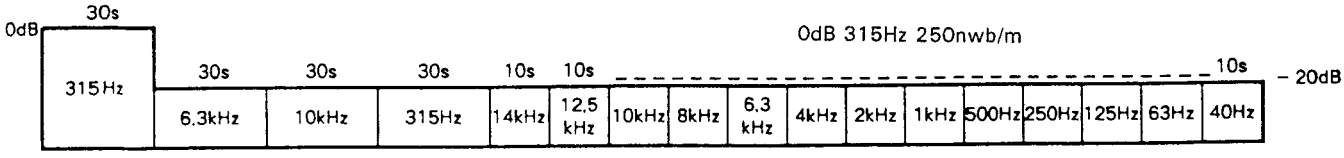

Fig. 4–3 Bande d'étalommge STD–331E

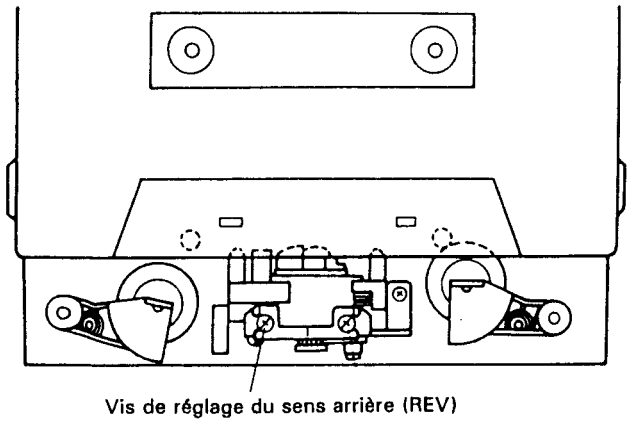

Fig. 4–4 Réglage d'azimut de la tête

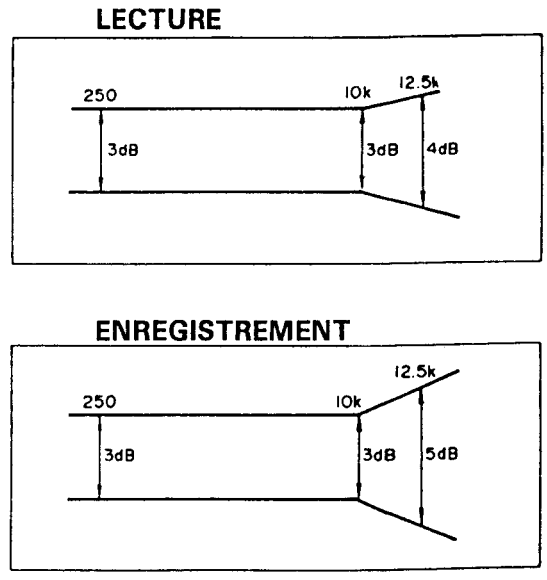

Fig. 4–5 Réponse en fréquence

■ Réglage de la Platine I

1. Réglage d'azimut de la tête

Opération	Sélecteur de bande	Mode	Signal appiligeé / bande d'étalonnage	Emplacement du réglage	Emplacement du point de mesure	Valeur mesurée	Observations
1	NORM	PLAY	Reproduire la bande d'éealonnfe STD–331E (10kHz, –20dB).	Vis de réglage d'ézimut de tête (Fig. 4–4)	Ensemble POWER TP401 (can. G) TP403 (can. D)	Régler de manière que le niveau du signal soit maximal et que différence de phase soit zéro (0).	Une fois le réglage terminé, bloquer la vis avec un frein de vis.

2. Réglage du niveau de lecture

● Toujours effectuer un réglage minutieux, car la valeur réglée sera le niveau Dolby pour la lecture.

Opération	Sélecteur de bande	Mode	Signal appiligeé / bande d'étalonnage	Emplacement du réglage	Emplacement du point de mesure	Valeur mesurée	Observations
1	NORM	PLAY	Reproduire la bande d'éealonnfe STD–331E (315kHz, 0dB)	Ensemble DOLBY VR1301 (can. G) VR1302 (can. D)	Ensemble POWER TP401 (can. G) TP403 (can. D)	–1,2dBV ±0.5dB	

Réglage de la Platine II

1. Réglage d'azimut de la tête

Opéra-tion	Sélecteur de bande	Mode	Signal appiligeé / bande d'étalonnage	Emplacement du réglage	Emplacement du point de mesure	Valeur mesurée	Observations
1	NORM	PLAY	Reproduire la bande d'éealonnfe STD–331E (10kHz, –20dB).	Vis de réglage d'ézimut de tête (Fig. 4–4)	Ensemble POWER TP401 (can. G) TP403 (can. D)	Régler de manière que le niveau du signal soit maximal et que différence de phase soit zéro (0).	Une fois le réglage terminé, bloquer la vis avec un frein de vis.

2. Réglage du niveau de lecture

- Toujours effectuer un réglage minutieux, car la valeur réglée sera le niveau Dolby pour la lecture.

Opéra-tion	Sélecteur de bande	Mode	Signal appiligeé / bande d'étalonnage	Emplacement du réglage	Emplacement du point de mesure	Valeur mesurée	Observations
1	NORM	PLAY	Reproduire la bande d'éealonnfe STD–331E (315kHz, 0dB)	Ensemble DOLBY VR1303 (can. G) VR1304 (can. D)	Ensemble POWER TP401 (can. G) TP403 (can. D)	–1,2dBV ±0.5dB	

3. Réglage du niveau d'enregistrement et du niveau de polarisation.

- Avant de procéder au réglage, tourner VR401 et VR2403 de 45 degrés dans le sens contraire des aiguilles d'une montre à partir du centre mécanique.

Opéra-tion	Sélecteur de bande	Mode	Signal appiligeé / bande d'étalonnage	Emplacement du réglage	Emplacement du point de mesure	Valeur mesurée	Observations
1	NORM	REC PAUSE	Appliquer 315Hz à la borne IN de la broche CD RCA. Régler la fonction sur CD. Mettre en place la bande STD–630.	Niveau du signal d'entrée	Ensemble POWER TP401 (can. G) TP403 (can. D)	Régler le signal d'entrée à –25,2dBV.	
2		REC/ PLAY	Enregistrer/reproduire STD–630.	Ensemble POWER VR2401 (can. G) VR2402 (can. D)		Répéter l'enregistrement/ reproduction jusqu'à ce que le niveau de reproduction de 315Hz soit –25,2dBV ±0,5dBV.	
3		REC PAUSE	Appliquer 10kHz à la borne IN de la broche CD RCA. Régler la fonction sur CD. Mettre en place la bande STD–630.	Niveau du signal d'entrée		Régler le signal d'entrée à –25,2dBV.	
4		REC/ PLAY	Enregistrer/reproduire STD–630.	Ensemble POWER VR401 (can. G) VR2403 (can. D)		Répéter l'enregistrement/ reproduction jusqu'à ce que le niveau de reproduction de 10kHz soit –25,2dBV ±0,5dBV.	
5	Répéter les étapes 1 à 4 afin d'obtenir le meilleur réglage possible.						

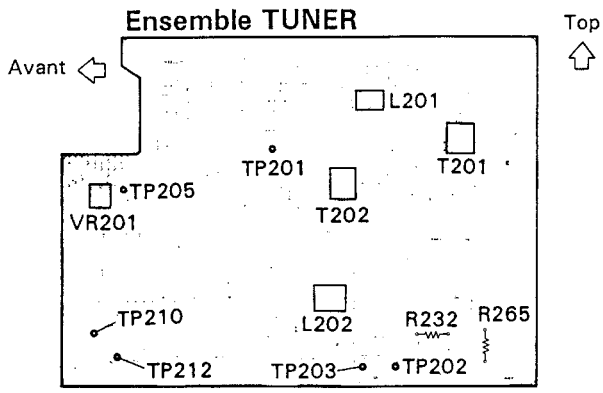

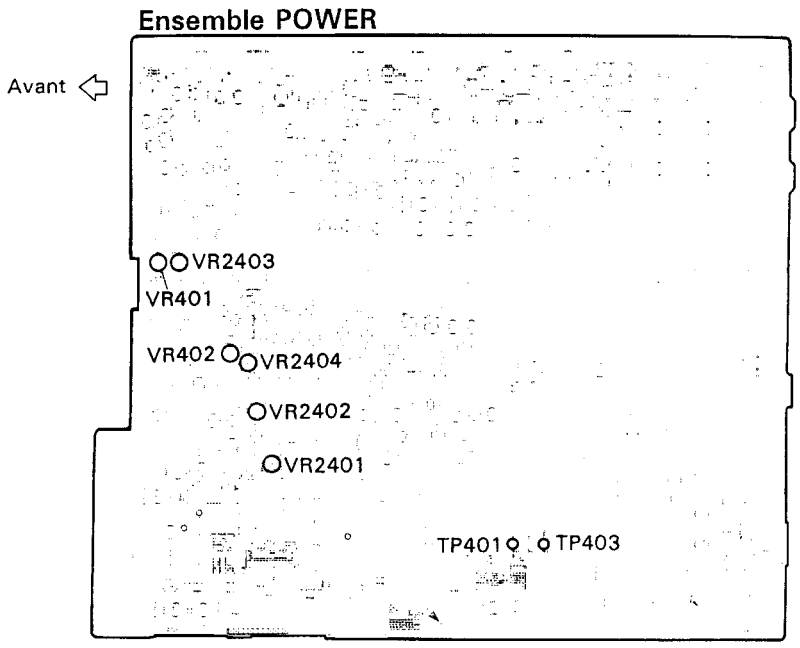

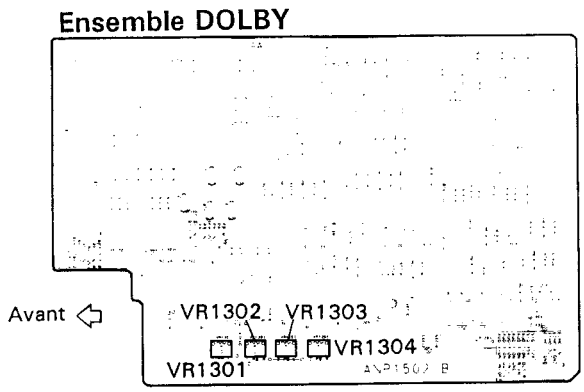

Fig. 4–6 Points de réglage

4. AJUSTE

4.1 BLOQUE DEL SINTONIZADOR DE FM

4.1.1 Bloque del sintonizador de FM

- Ajuste a la banda de FM
- Conecte el sontonizador como se muestra en la Fig. 4–1.
- Las posiciones de ajuste y el terminal TP están en el conjunto del sintonizador (TUNER).

**1 :*
Modulación estéreo : Principal 1kHz L+R ±68,25kHz dev.
Piloto 19kHz ±6,75kHz dev.

N° de paso	Ajuste	FM SG (1kHz±75kHz dev.)		Fresuenci metro de recepción	Lugar de ajuste	Especificaciones
		Frecuencia (MHz)	Nivel (dBμV)			
1	Ajuste de la sensibilidad de FM	98	Baja entrada	98MHz	T201	Ajuste para maximizar la tensión de salida de TP210 (L ch OUT) o TP 212 (R ch OUT).
2	Confirmación de 87,5MHz VT (tensión de sintonización).	Sin entrada		87,5MHz	—	Confirme que TP201 sea 3,5V ±1,5V.
3	Confirmación y ajuste de 108MHz VT (tensión de sintonización).			108MHz	L201	Confirme que TP201 sea 8,7V $^{+1,3}_{-2}$ V. AJuste en L201 sólo si la tensión es de 10V o más.
4	Ajuste de T-METER	98	60	98MHz	L202	Ajuste de modo que la diferencia de potencial entre TP202 y TP203 sea 0V ±10mV.
5	Ajuste del nivel de activación del indicador TUNED.	98	Vea la tabla de la derecha.	98MHz	R265	R265 está montado o extraído en el ajuste antes del embarque. Consulte la tabla siguiente y monte o extraiga R265 para alinear con el punto en el que se enciende el indicador TUNED.
6	Ajuste de MPX VCO	Sin modulación	80	98MHz	VR201	Ajuste de modo que la frecuencia de TP205 sea 76kHz ±100Hz.
7	Ajuste de la distorsión	98 *1 (Estéreo)	60	98MHz	T202	Si la distorsión de TP210 (Lch OUT)o TP212 (Rch OUT) excede el 1.5%, ajuste en T202 para ser del 1.5% o menos.

R265	Nivel de entrada
Requerido	25dBμV (±15dB)
No se requiere	25dBμV (±15dB) o más alto

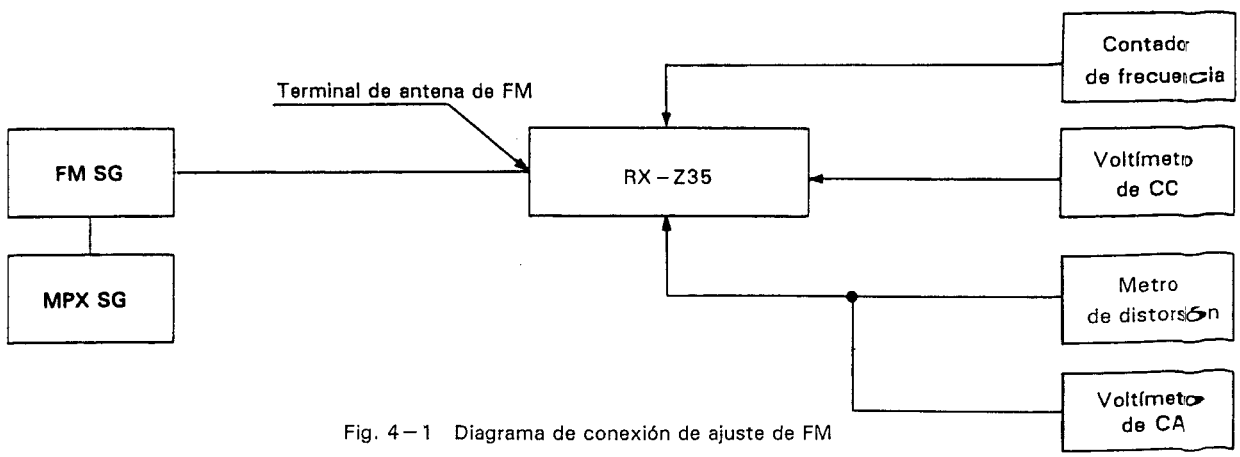

Fig. 4–1 Diagrama de conexión de ajuste de FM

4.1.2 Bloque del sintonizador de AM

- Ajuste a la banda de AM
- Conecte el sontonizador como se muestra en la Fig. 4–2.
- Las posiciones de ajuste están en el conjunto del sintonizador (TUNER).

N° de paso	Ajuste	AM SG (400Hz 30% Mod.)		Fresuenci metro de recepción	Lugar de ajuste	Especificaciones
		Frecuencia (kHz)	Nivel (dBμV/m)			
1	Ajuste del nivel de activación del indicador TUNED.	1000 *2	Vea la tabla de la izquierda.	1000kHz	R232	R232 está montado o extraído en el ajuste antes del embarque. Consulte la tabla siguiente y monte o extraiga R232 para alinear con el punto en el que se enciende el indicador TUNED.

R232	Nivel de entrada
Requerido	60dBμV/m (±15dB) o más bajo
No se requiere	Más alto que 60dBμV/m (±15dB)

**2 : Esta frecuencia se aplica a las áras clasificadas como paso de 10kHz. Para YPW y las áreas de paso de 9kHz, efectúe el ajuste a 999kHz.*

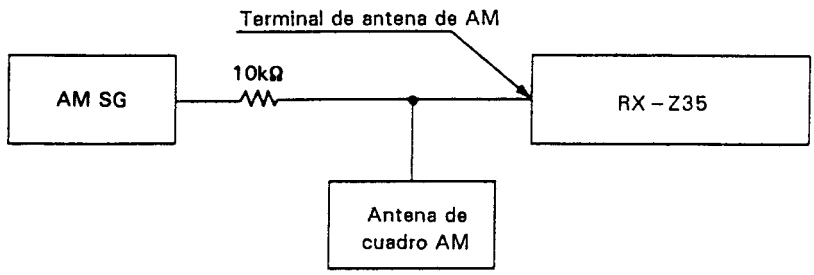

Fig. 4–2 Diagrama de conexión de ajuste de AM

4.2 BLOQUE DE AMPLIFICADOR DECK

4.2.1 Ajuste de la sección mecánica

- Cinta de prueba : STD–301 (3kHz, 30min)
- Ajuste del modo de velocidad doble : Cortocircuite TP409 y TP410 del conjunto del POWER. Para desactivar el modo, desconecte el cortocircuito.

1. Ajuste de la velocidad de la cinta

N°	Modo	Señal de enerada/cinea de prueba	Punto de ajuste		Punto de medición	Valor de ajuste	Observaciones
1	PLAY	Reproducción de la cinta STD–301 a 3kHz.	Sección I	VR402 del conjunto POWER	TP401 del conjunto POWER (canal izquierdo)	Presione el botón PLAY y ajuste la frecuencia a 3010Hz ±10Hz. Cerciórese de que la fluctuación y el efecto de trémolo estén dentro de los límites del 0,3%.	
2	PLAY (Modo de velocidad doble)			VR2404 del conjunto POWER		Cambie al modo de velocidad doble y presione el botón PLAY. Ajuste la frecuencia a 6020Hz ±20Hz.	

4.2.2 Ajuste de la sección eléctrica

■ Antes de ajustar el sección eléctrica, compruebe y realice lo siguiente.

1. El ajuste de la velocidad de la cinta ha finalizado.
2. Limpie y desmagnetice la cabeza empleando un desmagnetizador de cabezas.
3. Cuando se mida, el nivel devel debe ser de 0dBV = 1Vrms.
4. Emplee el lado A de la cinta especificada para realizar el ajuste.
   STD–331E : Para ajuste del sistema de reproducción.
   STD–630 : Cinta en blanco NORMAL
5. Prepare los dispositivos de medición siguientes : Milivoltímetro de CA, oscilador de baja frecuencia, atenuador, y osciloscopio
6. Ajuste ambos canales, izquierdo y derecho, a menos que se especifique otra cosa.
7. Ajuste los interruptores DOLBY NR a OFF, VOCAL CANCEL a OFF (RX–Z35/SDXJ, YPWXJ), y MIC MIX a MIN (RX–Z35/SDXJ, YPWXJ).
8. Antes del ajuste, deje que la unidad se caliente durante varios minutos.
   Especialmente antes de ajustar las características de frecuencia de grabación y reproducción, deje que se caliente durante 3 a 5 minutos en el modo REC/PLAY.
9. Cerciórese de seguir el orden apropiado del procedimiento de ajuste. Cualquier cambio en el orden podría causar un resultado inadecuado.

Lista de adjuste

Sección I

1. Azimut de la cabeza
2. Nivel de reproducción

Sección II

1. Azimut de la cabeza
2. Nivel de reproducción
3. Ajuste del nivel de grabación y nivel de polarización

NOTA :
Como el nivel de grabación de referencia es igual a 250 nwb/m para el STD-331E, el nivel de grabación será 4 dB mayor para el STD-331B (160 nwb/m). Al realizer el ajuste, preste suma atención al tipo de cintá que se está utilizando.

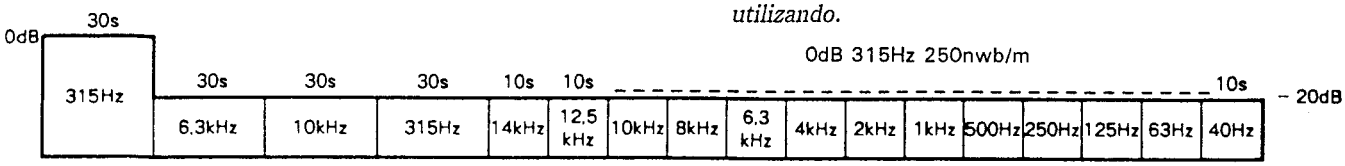

Fig. 4–3 Cinta de prueba STD–331E

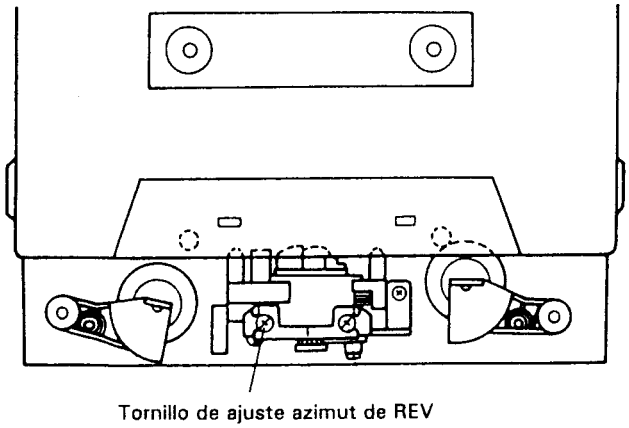

Fig. 4–4 Ajuste del azimut de la cabeza

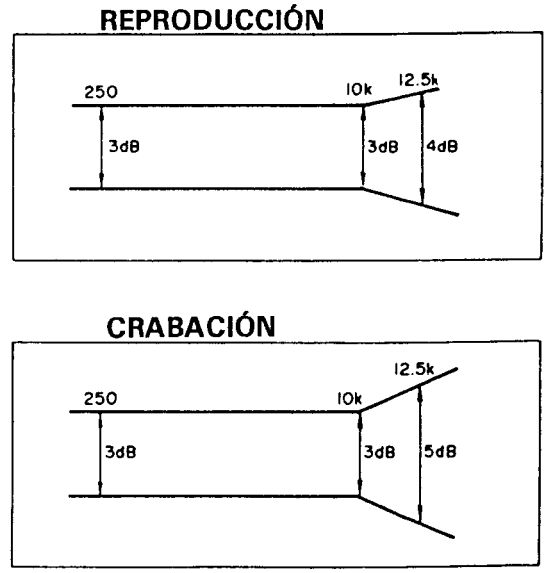

Fig. 4–5 Características de frecuencia

■ Ajuste de la sección I

1. Ajuste azimutal de la cabeza

Procedimiento	Selector de cinta	Modo	Señal de entrada / cinta de prueba	Punto de ajuste	Punto de medición	Valor de ajuste	Observaciones
1	NORM	PLAY	Ponga la cinta de prueba STD-331E en reproducción (10kHz, –20dB).	Tornillo de ajuste azimutal de la cabeza (Fig. 4–4)	Conjunto POWER TP401 (canal izquierdo) TP403 (canal derecho)	Ajuste de modo que el nivel de la señal sea el máximo y que la diferencia de fase sea cero (0).	Bloquee el tornillo con bloqueador de tornillos después de haber terminado el ajuste.

2. Ajuste del nivel de reproducción

● Tenga mucho cuidado durante el ajuste, ya que el valor ajustado será el nivel Dolby fijado para reproducción.

Procedimiento	Selector de cinta	Modo	Señal de entrada / cinta de prueba	Punto de ajuste	Punto de medición	Valor de ajuste	Observaciones
1	NORM	PLAY	Ponga la cinta de prueba STD-331E en reproducción (315Hz, 0dB).	Conjunto DOLBY VR1301 (canal izquierdo) VR1302 (canal derecho)	Conjunto POWER TP401 (canal izquierdo) TP403 (canal derecho)	–1,2dBV ±0.5dB	

Ajuste de la sección II

1. Ajuste azimutal de la cabeza

Procedimiento	Selector de cinta	Modo	Señal de entrada / cinta de prueba	Punto de ajuste	Punto de medición	Valor de ajuste	Observaciones
1	NORM	PLAY	Ponga la cinta de prueba STD-331E en reproducción (10kHz, −20dB).	Tornillo de ajuste azimutal de la cabeza (Fig. 4−4)	Conjunto POWER TP401 (canal izquierdo) TP403 (canal derecho)	Ajuste de modo que el nivel de la señal sea el máximo y que la diferencia de fase sea cero (0).	Bloguee el tornillo con bloqueador de tornillos después de haber terminado el ajuste.

2. Ajuste del nivel de reproducción

- Tenga mucho cuidado durante el ajuste, ya que el valor ajustado será el nivel Dolby fijado para reproducción.

Procedimiento	Selector de cinta	Modo	Señal de entrada / cinta de prueba	Punto de ajuste	Punto de medición	Valor de ajuste	Observaciones
1	NORM	PLAY	Ponga la cinta de prueba STD-331E en reproducción (315Hz, 0dB).	Conjunto DOLBY VR1303 (canal izquierdo) VR1304 (canal derecho)	Conjunto POWER TP401 (canal izquierdo) TP403 (canal derecho)	−1,2dBV ±0.5dB	

3. Ajuste el nivel de grabación y nivel de polarización

- Antes de iniciar el ajuste, gire 45 grados VR401 y VR403 hacia la izquierda partiendo del centro mecánico.

Procedimiento	Selector de cinta	Modo	Señal de entrada / cinta de prueba	Punto de ajuste	Punto de medición	Valor de ajuste	Observaciones
1	NORM	REC PAUSE	Introduce 315Hz en el terminal IN del tipo RCA de CD. Ajuste la función a CD. Ajuste la cinta STD-630.	Nivel de la señal de entrada	Conjunto POWER TP401 (canal izquierdo) TP403 (canal derecho)	Ajuste la señal de entrada para ser de −25,2dBV.	
2		REC/ PLAY	Graba/reproduce la STD-630.	Conjunto POWER VR2401 (canal izquierdo) VR2402 (canal derecho)		Repita la grabación/ reproducción hasta que el nivel de reproducción de 315Hz sea de −25,2dBV ±0,5dBV.	
3		REC PAUSE	Introduce 10kHz en el terminal IN del tipo RCA de CD. Ajuste la función a CD. Ajuste la cinta STD-630.	Nivel de la señal de entrada		Ajuste la señal de entrada para ser de −25,2dBV.	
4		REC/ PLAY	Graba/reproduce la STD-630.	Conjunto POWER VR401 (canal izquierdo) VR2403 (canal derecho)		Repita la grabación/reproducción hasta que el nivel de reproducción de 10kHz sea de −25,2dBV ±0,5dBV.	
5	Repita los pasos 1 al 4 y realice el mejor ajuste.						

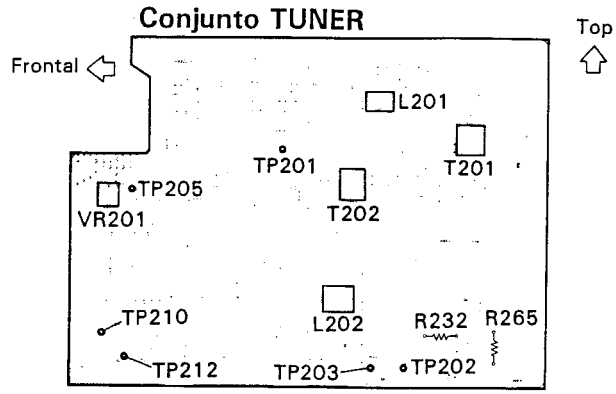

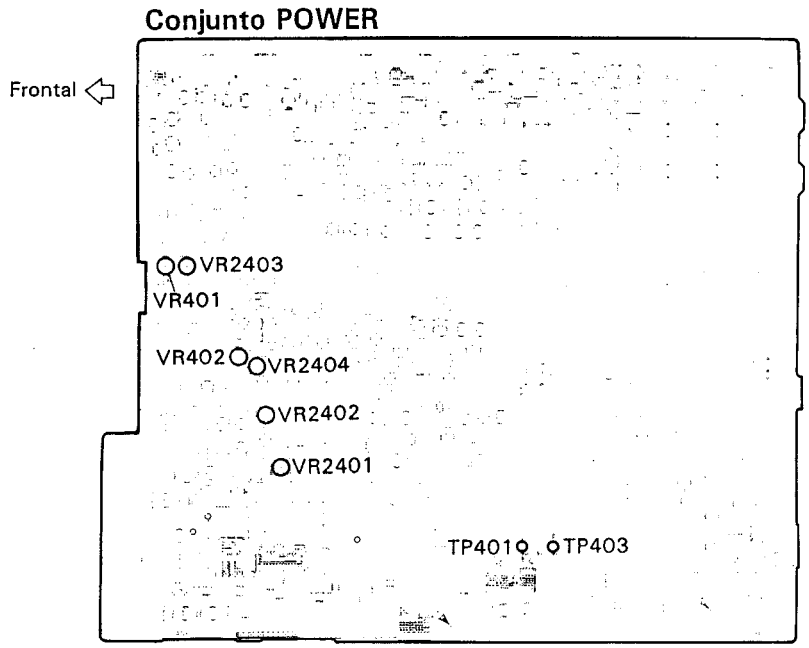

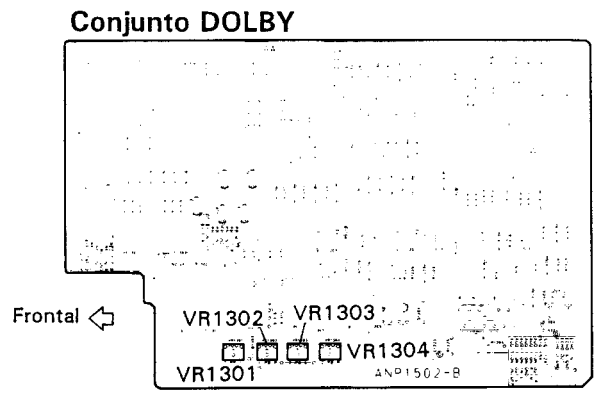

Fig. 4–6 Ponto de ajuste

5. IC INFORMATION

- *The information shown in the list is basic information and may not correspond exactly to that shown in the schematic diagrams.*

■ IC1401 (M50197P) : 1-CHIP DIGITAL ECHO IC

● Pin Function

No.	Pin Name	I/O	Description	Standard output voltage
1	NC	–		–
2	VCC (analog power supply)	–	Applies 4.5 to 5.5V. (Rated voltage : 5V)	–
3	REF (reference)	–	Analog reference voltage ≒ 1/2Vcc	2.5V
4	AGND (analog GND)	–		0V
5	DGND (digital GND)	–		0V
6	XOUT (oscillator output)	O		2.5V
7	XIN (oscillator input)	I		
8	μCOM / $\overline{\text{EASY}}$	I	H = Microcomputer mode : Serial data control L = Easy mode : Parallel data control	–
9	VDD (digital power supply)	–	Applies 4.5 to 5.5V. (Rated voltage : 5V)	–
10	TEST	I	H = Test mode L = Normal mode	–
11	MODE	I	Changes mode *	–
12	REQ / DEL 1 (request/delay 1)	I	Microcomputer mode : Data request signal input Easy mode : Delay time setting *	–
13	REQ / DEL 2 (request/delay 2)	I		–
14	REQ / DEL 3 (request/delay 3)	I		–
15	MUTE	I	Mute control, H = Mute	–
16 | 25	NC	–		–
26	GC1 (gain control 1)	–	Gain control for Demodulator	0.6 V when no signal is input.
27	CC1 (current control 1)	–	ADM control for Demodulator	
28	GC0 (gain control)	–	Gain control for Modulator	
29	CC0 (current control)	–	ADM control for Modulator	
30	OP1 OUT (OP-AMP 1 output)	O	Configures the integrator for demodulator by external C.	2.5V
31	OP1 IN (OP-AMP 1 input)	I		2.5V
32	OP2 IN (OP-AMP 2 input)	I	Configures the integrator for modulator by external C.	2.5V
33	OP2 OUT (OP-AMP 2 output)	O		2.5V
34	LPF2 IN (low-pass filter 2 input)	I	Configures the low-pass filter on the output side by external CR.	2.5V
35	LPF2 OUT (low-pass filter 2 output)	O		2.5V
36	NC	–		–
37	ECHOFB (echo feedback)	O	Adjusts the amount of feedback during the echo mode. (Echo mode only)	2.5V
38	LPF1 OUT (low-pass filter 1 output)	O	Configures the low-pass filter on the input side by external CR.	2.5V
39	LPF1 IN (low-pass filter 1 input)	I		2.5V
40	NC	–		–

Note :
** : See below section "Operation".*

● Operation

(1) Operation mode

MODE	Function	ECHOFB output
L	Surround mode	OFF
H	Echo mode	ON

(2) Delay time

DEL 1	DEL 2	DEL 3	Surround mode		Echo mode	
			fs	Td	fs	Td
L	L	L	500	4.1	250	20.5
H	H	L		10.2		41.0
H	L	L		14.3		61.4
L	H	L		20.5		81.9
H	L	H	500	24.6	125	98.3
L	L	H		30.7		122.9
L	H	H		34.8		139.3
H	H	H		41.0		163.8

fs = Sampling frequency (kHz)
Td = Delay time (msec)

■ PDG079A (IC51) : SYSTEM CONTROL MICRO-COMPUTER

● Pin Function

No.	Pin Name	I/O	Description
1	REC MUTE	O	REC MUTE ON/$\overline{\text{OFF}}$
2	SURROUND	O	SURROUND ON/$\overline{\text{OFF}}$
3	VOCAL CANCEL	O	VOCAL CANCEL ON/$\overline{\text{OFF}}$ (RX-Z35/SDXJ, YPWXJ only)
4	STANDBY	O	POWER ON/$\overline{\text{OFF}}$
5	S8	O	KEY SCAN OUTPUT (S8)
6	S9	O	KEY SCAN OUTPUT (S9)
7	S10	O	KEY SCAN OUTPUT (S10)
8	S11	O	KEY SCAN OUTPUT (S11)
9	S12	O	KEY SCAN OUTPUT (S12)
10	S13	O	KEY SCAN OUTPUT (S13)
11	S14	O	KEY SCAN OUTPUT (S14)
12	S15	O	KEY SCAN OUTPUT (S15)
13	S16/T15	O	SEGMENT OUTPUT (a)
14	S17/T14	O	SEGMENT OUTPUT (b)
15	S18/T13	O	SEGMENT OUTPUT (c)
16	S19/T12	O	SEGMENT OUTPUT (d)
17	S20/T11	O	SEGMENT OUTPUT (e)
18	S21/T10	O	SEGMENT OUTPUT (f)
19	S22/T9	O	SEGMENT OUTPUT (g)
20	S23/T8	O	SEGMENT OUTPUT (h)
21	T7	O	NOT USED (OPEN)
22	T6	O	NOT USED (OPEN)
23	T5	O	FL TIMING OUTPUT (1G)
24	T4	O	FL TIMING OUTPUT (2G)
25	T3	O	FL TIMING OUTPUT (3G)
26	T2	O	FL TIMING OUTPUT (4G)
27	T1	O	FL TIMING OUTPUT (5G)
28	T0	O	FL TIMING OUTPUT (6G)

No.	Pin Name	I/O	Description
29	9k/10k	I	Channel step frequency switching input (9/10 kHz)
30	XTAL	–	Connect a 4MHz ceramic oscillator.
31	EXTAL	–	
32	$\overline{\text{RST}}$	–	RESET INPUT
33	NC	–	NOT USED (OPEN)
34	VDD	–	+5V POWER SUPPLY INPUT
35	AD0/PI0	O	NOT USED (OPEN)
36	4052 B	O	4052 B OUTPUT
37	4052 A	O	4052 A OUTPUT
38	4052 INH	O	4052 INH OUTPUT
39	AD4/PB0	I	KEY SCAN PB0 INPUT
40	AD3/PB1	I	KEY SCAN PB1 INPUT
41	PLAY 1	I	DECK 1 PLAY $\overline{\text{ON}}$/OFF
42	PLAY 2	I	DECK 2 PLAY $\overline{\text{ON}}$/OFF
43	NC	–	NOT USED (OPEN)
44	LM7001 $\overline{\text{CLK}}$	O	SERIAL CLOCK OUTPUT
45	LM7001 DATA	O	SERIAL DATA OUTPUT
46	TUNED	I	TUNER TUNED SIGNAL INPUT
47	REC	I	DECK 2 REC $\overline{\text{ON}}$/OFF
48	HIGH SPEED COPY	I	HIGH SPEED COPY KEY INPUT
49	TEST MODE	I	TEST MODE ON/$\overline{\text{OFF}}$
50	DOLBY MUTE	O	PB MUTE ON/$\overline{\text{OFF}}$
51	BIAS OSC	O	BIAS OSC ON/$\overline{\text{OFF}}$
52	LM7001 CE	O	PLL CHIP ENABLE
53	DECK 4066 CTRL	O	SELECT PB1/$\overline{\text{PB2}}$

No.	Pin Name	I/O	Description
54	DOLBY P/R	O	SELECT DOLBY PB/$\overline{\text{REC}}$
55	HIGH SPEED COPY	O	HIGH SPEED CONTROL HIGH/$\overline{\text{NORMAL}}$
56	SUPER BASS (IND)	O	S. BASS LED ON/$\overline{\text{OFF}}$ (RX-Z35/SDXJ, YPWXJ only)
57	SUPER BASS	O	S. BASS CONTROL ON/$\overline{\text{OFF}}$ (RX-Z35/SDXJ, YPWXJ only)
58	PE3	O	NOT USED (OPEN)
59	VR UP	O	VOLUME UP
60	VR $\overline{\text{DOWN}}$	O	VOLUME DOWN
61	STOP	I	AC DETECTION INPUT
62	REMOTE	I	REMOTE CONTROL SIGNAL INPUT
63	HIGH SPEED COPY (IND)	O	HIGH SPEED COPY LED $\overline{\text{ON}}$/OFF
64	VOCAL CANCEL (IND)	O	VOCAL CANCEL LED $\overline{\text{ON}}$/OFF (RX-Z35/SDXJ, YPWXJ only)
65	SURROUND (IND)	O	SURROUND LED $\overline{\text{ON}}$/OFF
66	PHONO (IND)	O	FUNCTION PHONO LED $\overline{\text{ON}}$/OFF
67	CD (IND)	O	FUNCTION CD LED $\overline{\text{ON}}$/OFF
68	TUNER (IND)	O	FUNCTION TUNER LED $\overline{\text{ON}}$/OFF
69	STANDBY (IND)	O	STANDBY LED $\overline{\text{ON}}$/OFF
70	TAPE (IND)	O	FUNCTION TAPE LED $\overline{\text{ON}}$/OFF
71	Vss	–	Connect to GND
72	TX	–	NOT USED (OPEN)
73	NC	–	NOT USED (OPEN)
74	TEX	–	Connect to Vdd or GND

No.	Pin Name	I/O	Description
75	VREF	–	Connect to Vdd
76	VFDP	–	–18V FDP LOAD POWER INPUT
77	MUTE	O	LINE MUTE ON/$\overline{\text{OFF}}$
78	SPEANA MUTE	O	SPECTRUM ANALYZER MUTE
79	FL OFF	O	FL $\overline{\text{ON}}$/OFF
80	MUTE RY	O	PROTECTION-RELAY $\overline{\text{ON}}$/OFF

6. FOR RX – Z35/YPWXJ AND RX – Z45/HEXJ TYPES

NOTES:

- *Parts marked by "NSP" are generally unavailable because they are not in our Master Spare Parts List.*
- *The ⚠ mark found on some component parts indicates the importance of the safety factor of the part. Therefore, when replacing, be sure to use parts of identical designation.*
- *Parts marked by "◉" are not always kept in stock. Their delivery time may be longer than usual or they may be unavailable.*

6.1 CONTRAST OF MISCELLANEOUS PARTS

RX – Z35/YPWXJ, RX – Z45/HEXJ and RX – Z35/SDXJ have the same construction except for the following :

Mark	Symbol & Description	Part No.			Remarks
		RX – Z35/ SDXJ type	RX – Z35/ YPWXJ type	RX – Z45/ HEXJ type	
◉	DISPLAY assembly	AWZ3837	AWZ3837	AWZ3965	
◉	DOLBY assembly	AWZ3967	AWZ3967	AWZ3968	
◉	POWER assembly	AWZ3832	AWZ4157	AWZ3969	
⚠	S1 Voltage selector (AC110V/120 – 127V/220V/240V)	AKX – 507	.....	.....	
⚠	T1 Power transformer	ATS1389	ATS1398	ATS1398	
⚠	FU602 Fuse (T800mA/125V)	AEK – 507	.....	AEK – 507	
⚠	AC Power cord	ADG1051	ADG1050	ADG1049	
⚠	AC Outlet 1P	.....	AKP – 517	AKP – 508	
	MIXING knob	AAB1265	AAB1265	.....	
	P. BASS button	AAD2125	AAD2125	.....	
	Front panel	AMB1947	AMB1947	AMB1948	
NSP	Rear panel	ANC1837	ANC1838	ANC1839	
NSP	Jack holder	ANG1613	ANG1613	.....	
	Packing case	AHD2209	AHD2209	AHD2235	
	Operating instructions (Spanish)	ARC1322	.....	.....	
	Operating instructions (French, Dutch, Spanish, Portuguese)	.....	.....	ARE1220	
	Remote control unit (CU – RX011)	AXD1257	AXD1257	.....	
	Remote control unit (CU – RX010)	.....	.....	AXD1256	

POWER ASSEMBLY (RX – Z35/YPWXJ)

POWER assembly (AWZ4157) and POWER assembly (AWZ3832) have the same construction except for the following :

Mark	Symbol & Description	Part No.		Remarks
		AWZ3832	AWZ4157	
⚠	AC SOCKET 1 – P	AKP1060	.....	

6.2 PCB PARTS LIST (RX – Z45/HEXJ)

NOTES:

- *Parts marked by "NSP" are generally unavailable because they are not in our Master Spare Parts List.*
- *The ⚠ mark found on some component parts indicates the importance of the safety factor of the part. Therefore, when replacing, be sure to use parts of identical designation.*
- *Parts marked by "◉" are not always kept in stock. Their delivery time may be longer than usual or they may be unavailable.*
- *When ordering resistors, first convert resistance values into code form as shown in the following examples.*

Ex. 1 When there are 2 effective digits (any digit apart from 0), such as 560 ohm and 47k ohm (tolerance is shown by J = 5%, and K = 10%).

560Ω → 56 × 10¹ → 561 ..... RD1/8PM 5 6 1 J
47kΩ → 47 × 10³ → 473 ..... RD1/4PS 4 7 3 J
0.5Ω → 0R5 ..... RN2H 0 R 5 K
1Ω → 010 ..... RS1P 0 1 0 K

Ex. 2 When there are 3 effective digits (such as in high precision metal film resistors).

5.62kΩ → 562 ×10¹ → 5621 ..... RN1/4PC 5 6 2 1 F

Mark	No.	Description	Parts No.
LIST OF ASSEMBLIES			
NSP		VOLUME ASSEMBLY	AWZ3829
◉		TUNER ASSEMBLY	AWZ3835
NSP		SWITCH ASSEMBLY	AWZ3836
◉		DISPLAY ASSEMBLY	AWZ3965
◉		DOLBY ASSEMBLY	AWZ3968
◉		POWER ASSEMBLY	AWZ3969
NSP		HEADPHONE ASSEMBLY	AWZ3834
NSP		TRANSE ASSEMBLY	AWZ3863
DISPLAY ASSEMBLY			
SEMICONDUCTORS			
	IC102	OP-AMP IC	RC4558DXP
	IC103	DISPLAY IC	BA6144
	IC105, 106	AUDIO IC	BA3812L
	IC2101–2104	DISPLAY IC	BA6144
	IC51	3IN1 SYSTEM CONTROL MICRO-COMPUTER	PDG079A
	Q111	N-FET	2SK246
	Q113–115	TRANSISTOR	2SC1740S
	Q2101–2104	TRANSISTOR	2SC1740S
	Q51	TRANSISTOR	XDA143ES
	Q52	TRANSISTOR	2SD438
	Q53	TRANSISTOR	2SB560
	Q54	TRANSISTOR	2SC3377
	Q55	TRANSISTOR	XDA143ES
	Q56	TRANSISTOR	XDC143ES
	Q57	TRANSISTOR	XDC124ES
	Q58	TRANSISTOR	XDA143ES
	Q59	TRANSISTOR	2SC1740S
	D101	DIODE	1SS252
	D2105	LED	AEL1044
	D51	DIODE	1SS252
	D52	ZENER DIODE	RD10ESB1
	D53	ZENER DIODE	RD3.6ESB1
	D54	ZENER DIODE	RD11ESB2
	D55–59	LED (RED)	AEL1108
	D60	LED (GREEN)	AEL1130
	D61	ZENER DIODE	RD6.2ESB
	D62, 66	DIODE	1SS252
	D67, 68	LED (RED)	AEL1108
	D69	DIODE	1SS252
	D71–73	ZENER DIODE	RD5.1ESB

Mark	No.	Description	Parts No.
SWITCHES			
	S51	SWITCH (TAPE)	ASG1034
	S53–62	SWITCH (ST. CALL, SURROUND & STEREO WIDE, TUNING UP, POWER/ STANDBY, MEMORY, TUNER, PHONO, TUNING DOWN, CD, BAND)	ASG1034
	S64	SWITCH (FM MONO)	ASG1034
COILS			
	L51	AXIAL INDUCTOR	LAU220K
CAPACITORS			
	C101, 102	CERAMIC CAPACITOR	CKCYX683M16
	C103, 104	CERAMIC CAPACITOR	CGMYX392M25
	C105, 106	CERAMIC CAPACITOR	CGMYB182M50
	C107, 108	CERAMIC CAPACITOR	CKCYX153M16
	C109, 110	ELECTR. CAPACITOR	CEASR15M50
	C111, 112	CERAMIC CAPACITOR	CKMYB391K50
	C113, 114	CERAMIC CAPACITOR	CKCYX183M16
	C115, 116	CERAMIC CAPACITOR	CGMYX682M25
	C117, 118	ELECTR. CAPACITOR	CEASR68M50
	C119, 120	CERAMIC CAPACITOR	CCDSL101J50
	C121, 122	CERAMIC CAPACITOR	CKCYX393M16
	C123, 124	CERAMIC CAPACITOR	CCMSL121J50
	C125, 126	ELECTR. CAPACITOR	CEAS4R7M50
	C127, 128	CERAMIC CAPACITOR	CKMYB471K50
	C129	CERAMIC CAPACITOR	CKMYB681K50
	C131, 132	CERAMIC CAPACITOR	CKCYX473M16
	C133	ELECTR. CAPACITOR	CEAS330M35
	C134	ELECTR. CAPACITOR	CEASR33M50
	C135	ELECTR. CAPACITOR	CEAS100M50
	C137, 138	ELECTR. CAPACITOR	CEAS4R7M50
	C139–142	ELECTR. CAPACITOR	CEAS470M16
	C143, 144	CERAMIC CAPACITOR	CKCYF473Z50
	C2101	CERAMIC CAPACITOR	CKCYX473M16
	C2103, 2104	CERAMIC CAPACITOR	CKCYX183M16
	C2105	ELECTR. CAPACITOR	CEASR22M50
	C2106	ELECTR. CAPACITOR	CEAS100M50
	C2107, 2108	CERAMIC CAPACITOR	CKCYB682K50
	C2109	CERAMIC CAPACITOR	CKCYX333M16
	C2110	ELECTR. CAPACITOR	CEAS100M50
	C2111, 2112	CERAMIC CAPACITOR	CKCYB272K50
	C2113	CERAMIC CAPACITOR	CKCYX223M25
	C2114	ELECTR. CAPACITOR	CEAS100M50
	C2115, 2116	CERAMIC CAPACITOR	CKCYB821K50
	C2117	CERAMIC CAPACITOR	CKCYB332K50
	C2118	ELECTR. CAPACITOR	CEAS100M50
	C50	ELECTR. CAPACITOR	CEAS4R7M50
	C51	CAPACITOR (47000/5.5)	ACH1135
	C52	CERAMIC CAPACITOR	CKCYF473Z50
	C53	ELECTR. CAPACITOR	CEAS470M16
	C54	CERAMIC CAPACITOR	CKCYX104M16
	C55, 56	ELECTR. CAPACITOR	CEAS4R7M50

Mark	No.	Description	Parts No.
RESISTORS			
	VR101–105	VR (100k-B5×2)	ACU1030
	R165	CARBON FILM RESISTOR	RD1/4PM101J
	R2101	CARBON FILM RESISTOR	RD1/4PM390J
	R2108	CARBON FILM RESISTOR	RD1/4PM390J
	R2115	CARBON FILM RESISTOR	RD1/4PM390J
	R2122	CARBON FILM RESISTOR	RD1/4PM390J
	R2129	CARBON FILM RESISTOR	RD1/4PM390J
	R51–55	CARBON FILM RESISTOR	RD1/4PM270J
⚠	R79	METAL OXIDE RESISTOR	RS2LMF390J
	R91	CARBON FILM RESISTOR	RD1/4PM220J
		Other resistors	RD1/8PM□□□J
OTHERS			
		REMOTE RECEIVER UNIT	AXX1023
	V51	FL TUBE	AAV-039
	X51	CERAMIC RESONATOR (4.00MHz)	ASS1025

DOLBY ASSEMBLY

SEMICONDUCTORS			
	IC1301	DOLBY-B IC	CXA1100P
	Q1301–1305	TRANSISTOR	2SC1740S
	Q1307	TRANSISTOR	2SC1740S
	Q1309, 1310	TRANSISTOR	2SC1740S
	D1301–1303	DIODE	1SS252
COILS			
	F1301, 1302	DOLBY FILTER	ATF1064
	L1301	AXIAL INDUCTOR	LAU221K
	L1302	AXIAL INDUCTOR	LAU221K
CAPACITORS			
	C1301–1304	ELECTR. CAPACITOR	CEAS010M50
	C1305, 1306	ELECTR. CAPACITOR	CEASR68M50
	C1307, 1308	ELECTR. CAPACITOR	CEAS2R2M50
	C1309	ELECTR. CAPACITOR	CEAS100M50
	C1310	ELECTR. CAPACITOR	CEAS220M50
	C1311	ELECTR. CAPACITOR	CEAS470M16
	C1312	ELECTR. CAPACITOR	CEAS101M10
	C1313	CERAMIC CAPACITOR	CKCYF473Z50
	C1315, 1316	CERAMIC CAPACITOR	CKCYX103M16

Mark	No.	Description	Parts No.
	C1317, 1318	CERAMIC CAPACITOR	CKCYX333M16
	C1319, 1320	CERAMIC CAPACITOR	CKCYX104M16
	C1323, 1324	ELECTR. CAPACITOR	CEAS4R7M50
	C1325, 1326	ELECTR. CAPACITOR	CEAS010M50
RESISTORS			
	VR1301, 1302	VR	VRTM6H203
	VR1303, 1304	VR	VRTM6H104
		Other resistors	RD1/8PM□□□J
OTHERS			
	CN2104	CONNECTOR (15P)	KPE15

POWER ASSEMBLY

SEMICONDUCTORS

Mark	No.	Description	Parts No.
	IC301	OP-AMP IC	RC4558DXP
	IC302	LOGIC IC	MC14052BCP
	IC303, 304	OP-AMP IC	RC4558DXP
	IC401	OP-AMP IC	RC4558DXP
	IC402	OP-AMP IC	M5220P
	IC404	LOGIC IC	XRU4066B
⚠	IC501, 502	IC PROTECTOR	ICP-N38
	IC601, 602	REGULATOR IC	MC7812CT
	Q2401, 2402	TRANSISTOR	2SC1740S
	Q2403	TRANSISTOR	XDC143ES
	Q2407	TRANSISTOR	XDA124ES
	Q2408	TRANSISTOR	2SC1740S
	Q2409	TRANSISTOR	XDC124ES
	Q2410	TRANSISTOR	2SC1740S
	Q305, 306	TRANSISTOR	2SC1740S
	Q307	TRANSISTOR	RN2201
	Q401, 402	N-FET	2SK373
	Q403	TRANSISTOR	2SC1740S
	Q405	TRANSISTOR	2SD438
	Q406	TRANSISTOR	2SC1740S
	Q407	TRANSISTOR	XDA124ES
	Q408	TRANSISTOR	XDC124ES
	Q411, 412	TRANSISTOR	2SC1740S
	Q501-504	TRANSISTOR	2SA992
	Q505, 506	TRANSISTOR	2SC1845
	Q507, 508	TRANSISTOR	2SC1740S
	Q509, 510	TRANSISTOR	2SD1276A
	Q511, 512	TRANSISTOR	2SB950A
	Q601	TRANSISTOR	2SA1048
	Q602	TRANSISTOR	2SC1845
	Q605	TRANSISTOR	2SC1740S
	Q606	TRANSISTOR	2SA1048
	Q607, 608	TRANSISTOR	2SA1515
	Q609	TRANSISTOR	XDC124ES
	Q610	TRANSISTOR	2SB560
	Q611	TRANSISTOR	2SB834
	Q612, 613	TRANSISTOR	2SC1740S
	Q614	TRANSISTOR	2SC3377
	Q615, 616	TRANSISTOR	XDC124ES
	Q621, 622	TRANSISTOR	2SC1740S
	D303	DIODE	1SS252
	D401-407	DIODE	1SS252
	D408, 409	ZENER DIODE	RD5.1ESB
	D501, 502	DIODE	1SS252
	D503, 504	ZENER DIODE	RD4.3ESB
	D601, 602	ZENER DIODE	UZ-12BS
	D603	DIODE	1SS252
	D604	DIODE	D3SBA20 (A)
	D605-608	DIODE	1SR139-400
	D609	ZENER DIODE	RD5.6ESB
	D610	ZENER DIODE	RD13ESB
	D611, 612	DIODE	1SR139-400
	D613	ZENER DIODE	RD20ESB
	D614-618	DIODE	1SS252

SWITCH & RELAIES

Mark	No.	Description	Parts No.
	S201	SLIDE SWITCH (9k/10k)	ASH1027
	RY601	RELAY	ASR1035
⚠	RY602	RELAY	ASR1027

COILS

Mark	No.	Description	Parts No.
	L401, 402	INDUCTOR	LTA392J
	L403, 404	INDUCTOR	LTA822J
	L410	INDUCTOR	LTA102J
	L501, 502	COIL	ATH-133

CAPACITORS

Mark	No.	Description	Parts No.
	C2401, 2402	MYLAR FILM CAPACITOR	CQMA153J50
	C301, 302	CERAMIC CAPACITOR	CCMSL101J50
	C303, 304	CERAMIC CAPACITOR	CKMYB152K50
	C305, 306	CERAMIC CAPACITOR	CKCYB562K50
	C307, 308	ELECTR. CAPACITOR	CEAS3R3M50
	C309	CERAMIC CAPACITOR	CKCYX104M16
	C310	ELECTR. CAPACITOR	CEAS220M50
	C311, 312	ELECTR. CAPACITOR	CEAS470M16
	C313, 314	ELECTR. CAPACITOR	CEAS220M50
	C332, 333	CERAMIC CAPACITOR	CKCYF103Z50
	C340	CERAMIC CAPACITOR	CKCYF473Z50
	C401, 402	ELECTR. CAPACITOR	CEAS100M50
	C403, 404	MYLAR FILM CAPACITOR	CQMA153J50
	C405, 406	ELECTR. CAPACITOR	CEAS330M35
	C407, 408	MYLAR FILM CAPACITOR	CQMA683J50
	C409, 410	MYLAR FILM CAPACITOR	CQMA272J50
	C411, 412	CERAMIC CAPACITOR	CKMYB681K50
	C413, 414	CERAMIC CAPACITOR	CCCSL271K500
	C415, 416	CERAMIC CAPACITOR	CCMSL100D50
	C417, 418	CERAMIC CAPACITOR	CKMYB471K50
	C419, 420	ELECTR. CAPACITOR	CEAS330M35
	C421, 422	MYLAR FILM CAPACITOR	CQMA682J50
	C423, 424	ELECTR. CAPACITOR	CEAS470M16
	C427	CERAMIC CAPACITOR	CKCYF473Z50
	C428	ELECTR. CAPACITOR	CEAS220M50
	C433	ELECTR. CAPACITOR	CEAS4R7M50
	C437-440	CERAMIC CAPACITOR	CKCYX104M16
	C450	ELECTR. CAPACITOR	CEAS470M16
	C451	MYLAR FILM CAPACITOR	CQMA473K50
	C452	MYLAR FILM CAPACITOR	CQMA103K400
	C453	MYLAR FILM CAPACITOR	CQMA333K250
	C501, 502	ELECTR. CAPACITOR	CEAS2R2M50
	C503, 504	CERAMIC CAPACITOR	CKCYB222K50
	C505, 506	ELECTR. CAPACITOR	CEAS470M25
	C507, 508	CERAMIC CAPACITOR	CCMSL680J50
	C509, 510	ELECTR. CAPACITOR	CEAS470M16
	C511, 512	CERAMIC CAPACITOR	CKMYB102K50
	C513, 514	CERAMIC CAPACITOR	CCMSL101J50
	C515-518	MYLAR FILM CAPACITOR	CQMA823K50
	C519, 520	CERAMIC CAPACITOR	CCMSL680J50
	C521-524	CERAMIC CAPACITOR	CCMSL470J50
	C525	CERAMIC CAPACITOR	CKCYX104M16
	C601	ELECTR. CAPACITOR	CEAS100M50
	C603	CKA (0.01/AC250V)	ACG1005
	C604-606	ELECTR. CAPACITOR (2200/42)	ACH1109
	C607	ELECTR. CAPACITOR	CEAS102M35
	C608-611	ELECTR. CAPACITOR	CEAS470M16
	C612	ELECTR. CAPACITOR	CEAS221M16
	C613	ELECTR. CAPACITOR	CEAS470M16
	C614	ELECTR. CAPACITOR	CEAS101M50
	C615	ELECTR. CAPACITOR	CEAS101M63
	C617	ELECTR. CAPACITOR	CEAS470M16
⚠	C618, 619	CKA (0.01/AC400V)	ACG1003
	C620	CKA (0.01/AC250V)	ACG1005
	C621-624	ELECTR. CAPACITOR	CEAS472M25
	C630	ELECTR. CAPACITOR	CEAS221M10

RESISTORS

Mark	No.	Description	Parts No.
	VR2401, 2402	VR	VRTM6V103
	VR2403	VR	VRTM6V104
	VR2404	VR	VRTM6V502
	VR401	VR	VRTM6V104
	VR402	VR	VRTM6V502
	R441	CARBON FILM RESISTOR	RD1/4PM471J
⚠	R442	METAL OXIDE RESISTOR	RS1LMF102J
⚠	R451	METAL OXIDE RESISTOR	RS2LMF470J
	R454	CARBON FILM RESISTOR	RD1/4PM180J
	R505, 506	CARBON FILM RESISTOR	RD1/4PM222J
	R507, 508	CARBON FILM RESISTOR	RD1/4PM123J
	R515-518	CARBON FILM RESISTOR	RD1/4PM222J
⚠	R523, 524	CARBON FILM RESISTOR	RD1/4PMF470J
	R525, 526	CARBON FILM RESISTOR	RD1/4PM221J
⚠	R527-530	METAL OXIDE RESISTOR	RS2LMFR68J
⚠	R531, 532	CARBON FILM RESISTOR	RD1/4PMF100J
⚠	R535, 536	CARBON FILM RESISTOR	RD1/4PMFL100J
⚠	R573, 574	METAL OXIDE RESISTOR	RS2LMF010J
	R601, 602	CARBON FILM RESISTOR	RD1/4PM100J
⚠	R603	METAL OXIDE RESISTOR	RS2LMF102J
⚠	R616	METAL OXIDE RESISTOR	RS2LMFR22J
⚠	R621	METAL OXIDE RESISTOR	RS2LMF101J
⚠	R624	METAL OXIDE RESISTOR	RS2LMF821J
⚠	R625	METAL OXIDE RESISTOR	RS2LMF221J
⚠	R626	METAL OXIDE RESISTOR	RS2LMF181J
	R627	CARBON FILM RESISTOR	RD1/4PM682J
⚠	R633	METAL OXIDE RESISTOR	RS2LMF221J
⚠	R634	METAL OXIDE RESISTOR	RS2LMF681J
	R637	CARBON FILM RESISTOR	RD1/4PM3R9J
⚠	R638	METAL OXIDE RESISTOR	RS2LMF101J
	R639, 640	CARBON FILM RESISTOR	RD1/4PM100J
		Other resistors	RD1/8PM□□□J

M

O

Th
RX

No.
740S
377
24ES
740S
2
2
ESB
2
ESB
2BS
2
A20 (A)
9-400
ESB
CSB
9-400
CSB
2
27
35
27
2J
2J
2J
133
153J50
101J50
3152K50
562K50
R3M50
104M16
20M50
70M16
20M50
103Z50
473Z50
00M50
53J50
0M35
83J50
72J50
681K50
71K500
100D50

Mark	No.	Description	Parts No.
	C417, 418	CERAMIC CAPACITOR	CKMYB471K50
	C419, 420	ELECTR. CAPACITOR	CEAS330M35
	C421, 422	MYLAR FILM CAPACITOR	CQMA682J50
	C423, 424	ELECTR. CAPACITOR	CEAS470M16
	C427	CERAMIC CAPACITOR	CKCYF473Z50
	C428	ELECTR. CAPACITOR	CEAS220M50
	C433	ELECTR. CAPACITOR	CEAS4R7M50
	C437–440	CERAMIC CAPACITOR	CKCYX104M16
	C450	ELECTR. CAPACITOR	CEAS470M16
	C451	MYLAR FILM CAPACITOR	CQMA473K50
	C452	MYLAR FILM CAPACITOR	CQMA103K400
	C453	MYLAR FILM CAPACITOR	CQMA333K250
	C501, 502	ELECTR. CAPACITOR	CEAS2R2M50
	C503, 504	CERAMIC CAPACITOR	CKCYB222K50
	C505, 506	ELECTR. CAPACITOR	CEAS470M25
	C507, 508	CERAMIC CAPACITOR	CCMSL680J50
	C509, 510	ELECTR. CAPACITOR	CEAS470M16
	C511, 512	CERAMIC CAPACITOR	CKMYB102K50
	C513, 514	CERAMIC CAPACITOR	CCMSL101J50
	C515–518	MYLAR FILM CAPACITOR	CQMA823K50
	C519, 520	CERAMIC CAPACITOR	CCMSL680J50
	C521–524	CERAMIC CAPACITOR	CCMSL470J50
	C525	CERAMIC CAPACITOR	CKCYX104M16
	C601	ELECTR. CAPACITOR	CEAS100M50
	C603	CKA (0.01/AC250V)	ACG1005
	C604–606	ELECTR. CAPACITOR (2200/42)	ACH1109
	C607	ELECTR. CAPACITOR	CEAS102M35
	C608–611	ELECTR. CAPACITOR	CEAS470M16
	C612	ELECTR. CAPACITOR	CEAS221M16
	C613	ELECTR. CAPACITOR	CEAS470M16
	C614	ELECTR. CAPACITOR	CEAS101M50
	C615	ELECTR. CAPACITOR	CEAS101M63
	C617	ELECTR. CAPACITOR	CEAS470M16
⚠	C618, 619	CKA (0.01/AC400V)	ACG1003
	C620	CKA (0.01/AC250V)	ACG1005
	C621–624	ELECTR. CAPACITOR	CEAS472M25
	C630	ELECTR. CAPACITOR	CEAS221M10

RESISTORS

	VR2401, 2402	VR	VRTM6V103
	VR2403	VR	VRTM6V104
	VR2404	VR	VRTM6V502
	VR401	VR	VRTM6V104
	VR402	VR	VRTM6V502
	R441	CARBON FILM RESISTOR	RD1/4PM471J
⚠	R442	METAL OXIDE RESISTOR	RS1LMF102J
⚠	R451	METAL OXIDE RESISTOR	RS2LMF470J

Mark	No.	Description	Parts No.
	R454	CARBON FILM RESISTOR	RD1/4PM180J
	R505, 506	CARBON FILM RESISTOR	RD1/4PM222J
	R507, 508	CARBON FILM RESISTOR	RD1/4PM123J
	R515–518	CARBON FILM RESISTOR	RD1/4PM222J
⚠	R523, 524	CARBON FILM RESISTOR	RD1/4PMF470J
	R525, 526	CARBON FILM RESISTOR	RD1/4PM221J
⚠	R527–530	METAL OXIDE RESISTOR	RS2LMFR68J
⚠	R531, 532	CARBON FILM RESISTOR	RD1/4PMF100J
⚠	R535, 536	CARBON FILM RESISTOR	RD1/4PMFL100J
⚠	R573, 574	METAL OXIDE RESISTOR	RS2LMF010J
	R601, 602	CARBON FILM RESISTOR	RD1/4PM100J
⚠	R603	METAL OXIDE RESISTOR	RS2LMF102J
⚠	R616	METAL OXIDE RESISTOR	RS2LMFR22J
⚠	R621	METAL OXIDE RESISTOR	RS2LMF101J
⚠	R624	METAL OXIDE RESISTOR	RS2LMF821J
⚠	R625	METAL OXIDE RESISTOR	RS2LMF221J
⚠	R626	METAL OXIDE RESISTOR	RS2LMF181J
	R627	CARBON FILM RESISTOR	RD1/4PM682J
⚠	R633	METAL OXIDE RESISTOR	RS2LMF221J
⚠	R634	METAL OXIDE RESISTOR	RS2LMF681J
	R637	CARBON FILM RESISTOR	RD1/4PM3R9J
⚠	R638	METAL OXIDE RESISTOR	RS2LMF101J
	R639, 640	CARBON FILM RESISTOR	RD1/4PM100J
	Other resistors		RD1/8PM□□□J

Mark	No.	Description	Parts No.
OTHERS			
	CN	SPEAKER TERMINAL 2-P	AKE1031
	CN107	CONNECTOR (10P)	KPE10
	CN108	CONNECTOR (11P)	KPE11
	CN111	CONNECTOR (15P)	KPE15
		PIN JACK 2P (SURROUND)	AKB1100
		PIN JACK 4P (CD, PHONO)	AKB1124
		JACK (TURNTABLE)	AKN-203
		JACK (CONTROL)	AKN-207

The other assemblies of RX-Z45/HEXJ is the same as that of RX-Z35/SDXJ, refer to " 3. PCB PARTS LIST ".

6.3 SCHEMATIC DIAGRAMS AND PCB PATTERNS

6.3.1 Overall Schematic Diagram

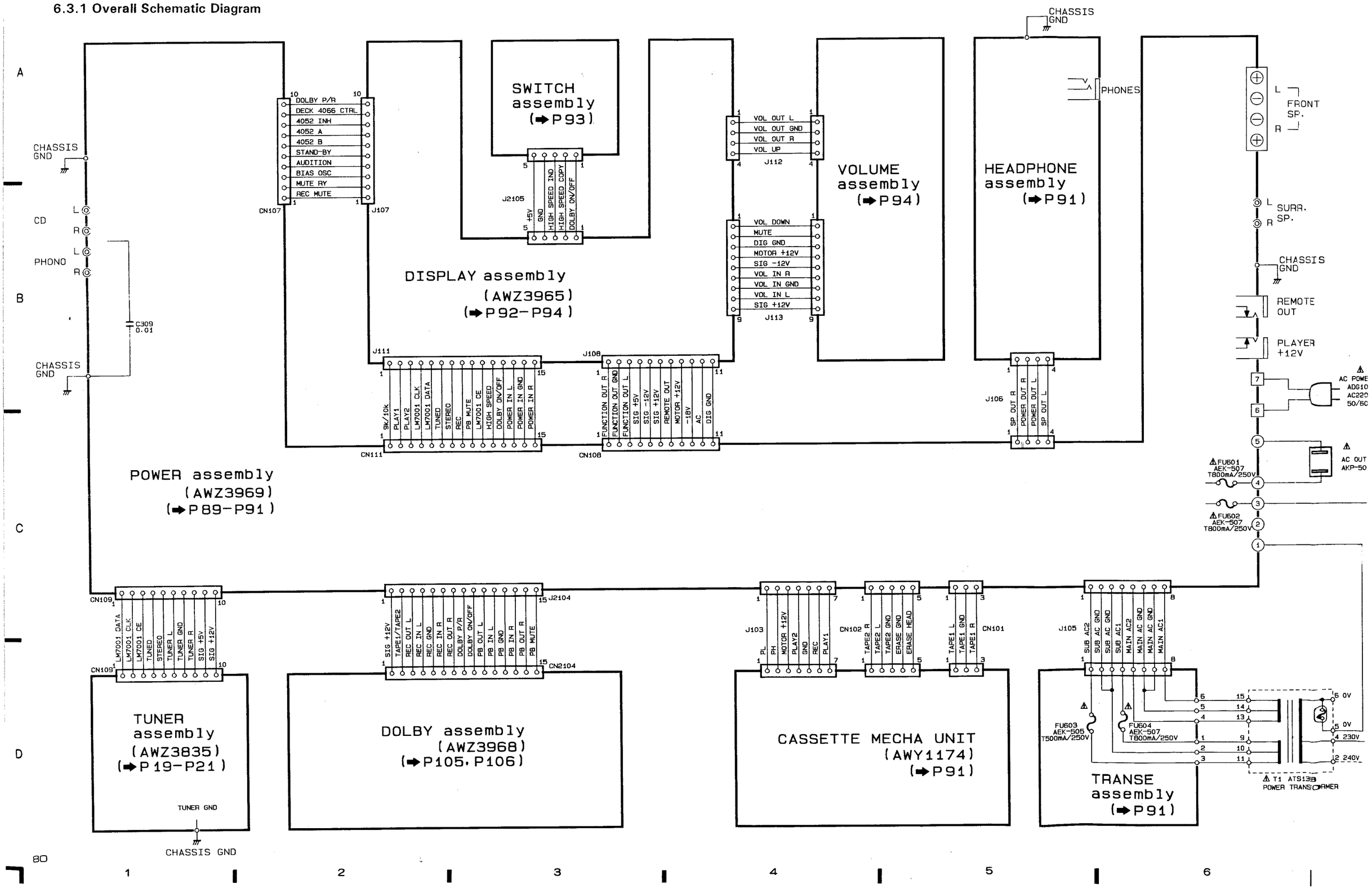

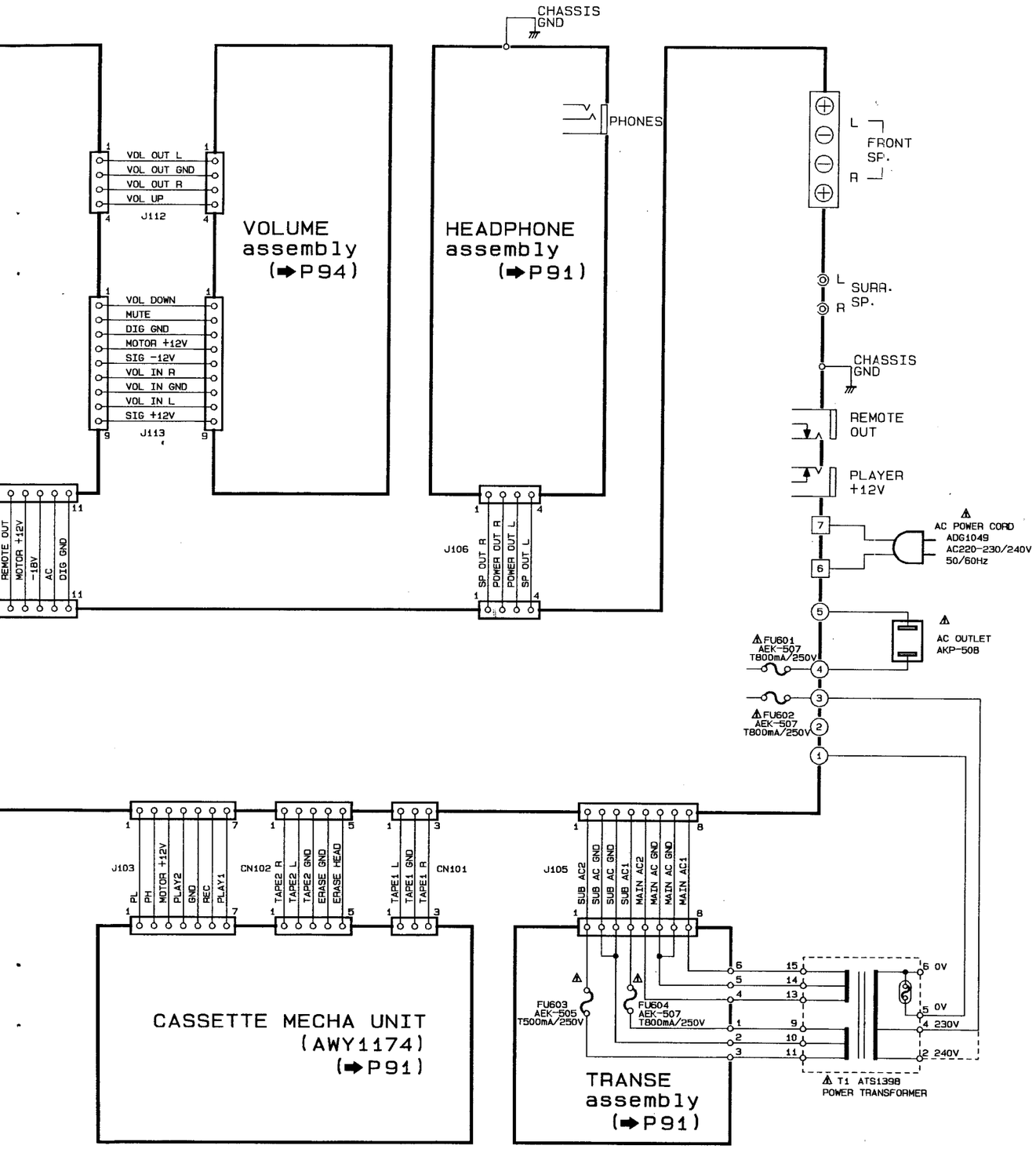

1. RESISTORS:
   Indicated in Ω, ¼W, ⅛W, ±5% tolerance unless otherwise noted k : kΩ, M : MΩ, (F) : ±1%, (G) : ±2%, (K) : ±10% (M); ±20% tolerance

2. CAPACITORS:
   Indicated in capacity (μF)/voltage (V) unless otherwise noted p : pF
   Indication without voltage is 50V except electrolytic capacitor.

3. VOLTAGE, CURRENT:
   [V] : Signal voltage at rated output.
   [ ] : DC voltage (V) at no input signal
   Value in ( ) is DC voltage at rated power.
   ⇦ mA : DC current at no input signal
   mV : Signal voltage at FM 1kHz ±75kHz DEV.

4. OTHERS:
   ➡ : Signal route.
   ⊘ : Adjusting point.
   The ⚠ mark found on some component parts indicates the importance of the safety factor of the part. Therefore, when replacing, be sure to use parts of identical designation.
   ※ marked capacitors and resistors have parts numbers.
   This is the basic schematic diagram, but the actual circuit may vary due to improvements in design.

5. SWITCHES (The underline indicates the switch position)

POWER assembly
S201 CHANNEL STEP (9k/10k)

SWITCH assembly
S2061 HIGH-SPEED COPY
S2062 DOLBY NR ON/OFF

DISPLAY assembly
S51 TAPE
S53 ST. CALL
S54 SURROUND & STEREO WIDE
S55 TUNING (UP)
S56 POWER/STANDBY
S57 MEMORY
S58 TUNER
S59 PHONO
S60 TUNING (DOWN)
S61 CD
S62 BAND
S64 FM MONO

Line Voltage Selection

Line voltage can be changed with the following steps.

1. Disconnect the AC power cord.
2. Remove the top cover.
3. Change the connection with the power transformer (T1) primary taps.
4. Stick the line voltage label on the rear panel.

Part No.	Description
AAX-193	220V label
AAX-192	240V label

6.3.2 POWER ASSEMBLY, TRANSE ASSEMBLY, HEADPHONE ASSEMBLY AND CASSETTE MECHA UNIT

This P. C. B. connection diagram is viewed from the foil side.

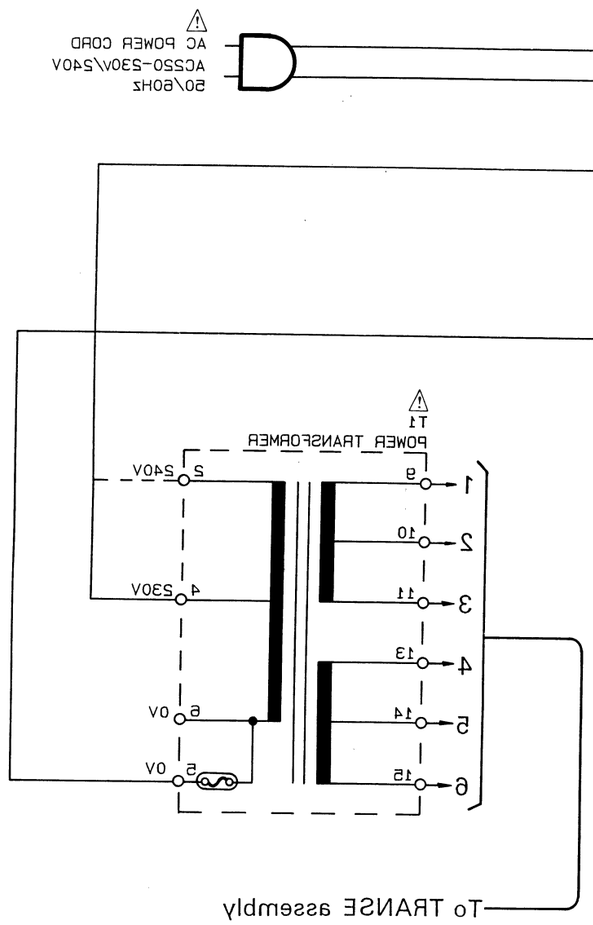

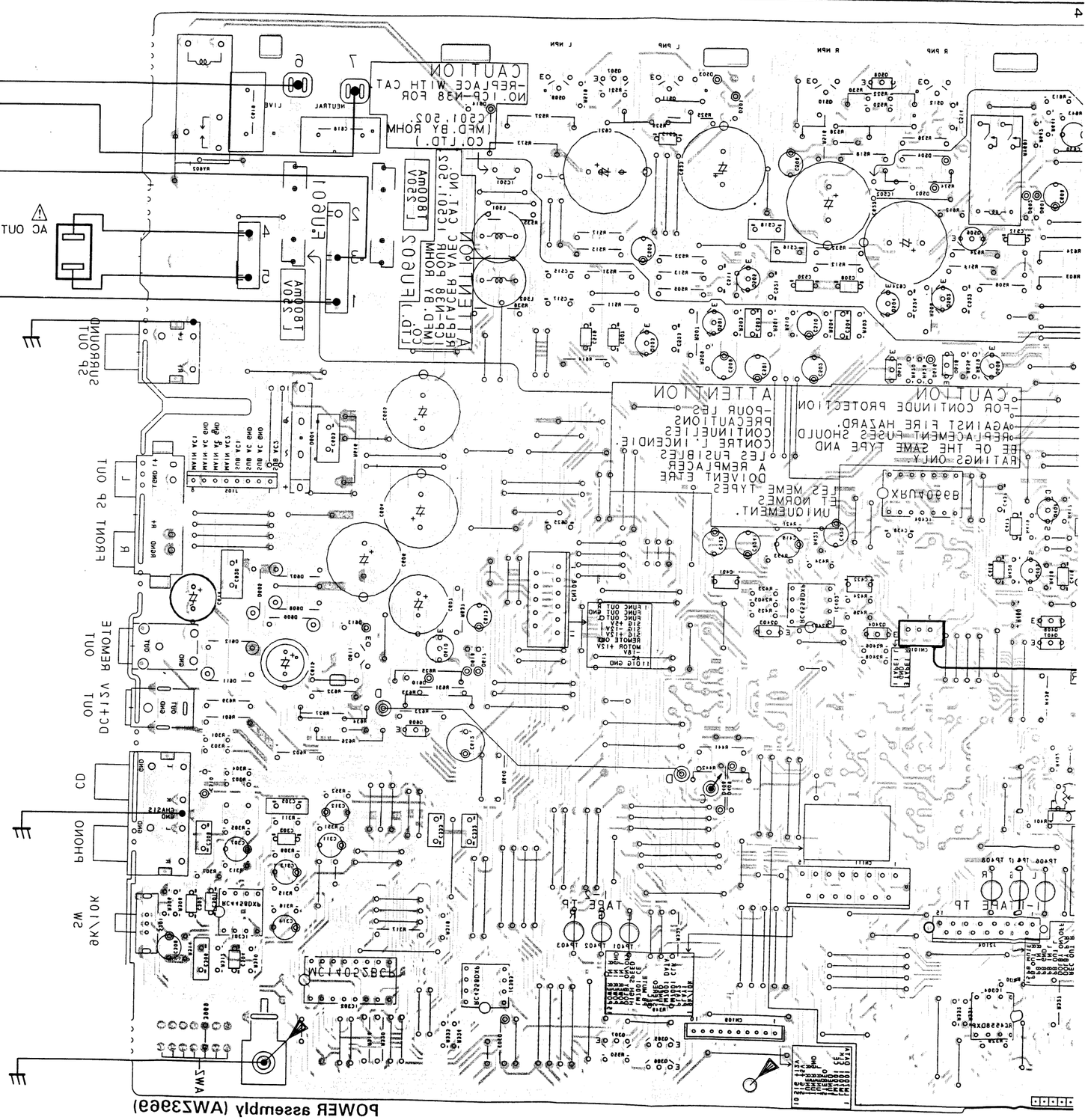

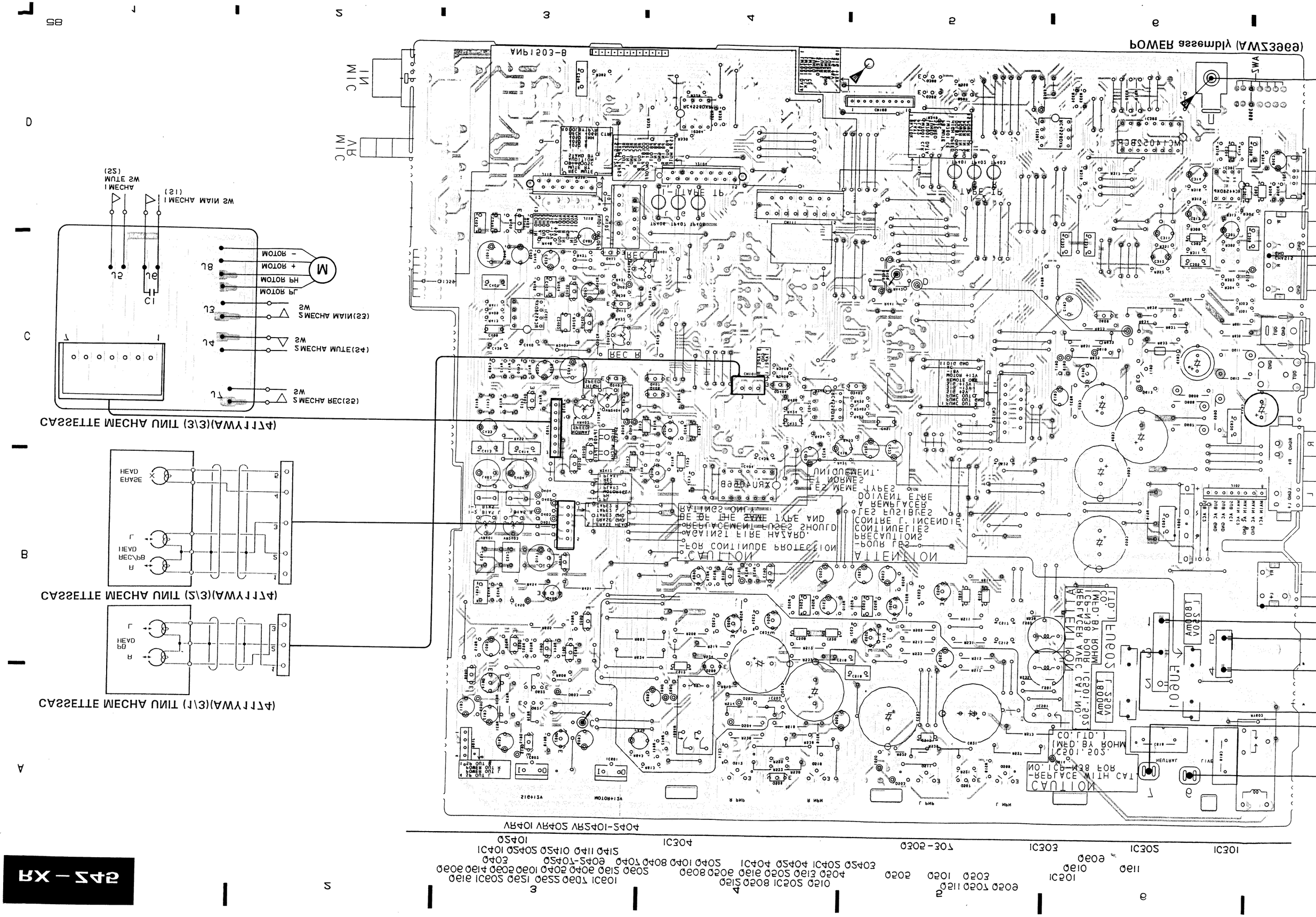
POWER assembly (WA2396)
CASSETTE MECHA UNIT (E\3)(WA)(ATTY)
CASSETTE MECHA UNIT (J\3)(WA)(ATTY)
CASSETTE MECHA UNIT (E\3)(WA)(ATTY)
MIC IN
MIC AR
REC R
REC L
PLAY R
PLAY L
CAUTION
ATTENTION
CAUTION
-REPLACE WITH CAT NO.1C1-BSN-C1 FOR IC201, 202.
MOTOR YB-EN-C1 (MED.YB.DEM.) CO.,LTD.
Am008T
V02S2
FUSE
IC201
IC202
IC203
IC204
IC205
IC301
IC401
IC402
IC403
IC404
IC405
IC406
IC407
IC408
IC409
IC410
IC411
IC412
IC413
IC414
IC415
IC416
IC417
IC418
IC419
IC420
IC421
IC422
IC423
IC424
IC425
IC426
IC427
IC428
IC429
IC430
IC431
IC432
IC433
IC434
IC435
IC436
IC437
IC438
IC439
IC440

CASSETTE MECHA UNIT (1/3)(AWY1174)

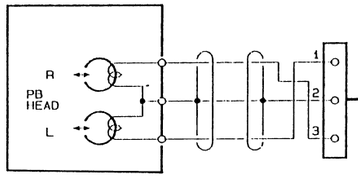

CASSETTE MECHA UNIT (2/3)(AWY1174)

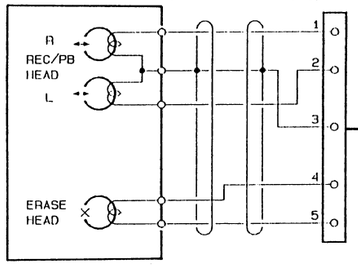

CASSETTE MECHA UNIT (3/3)(AWY1174)

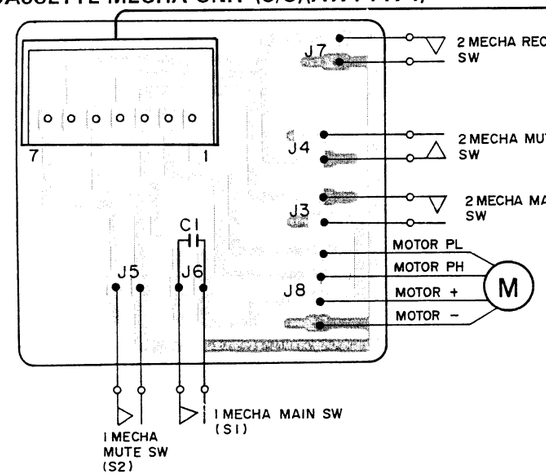

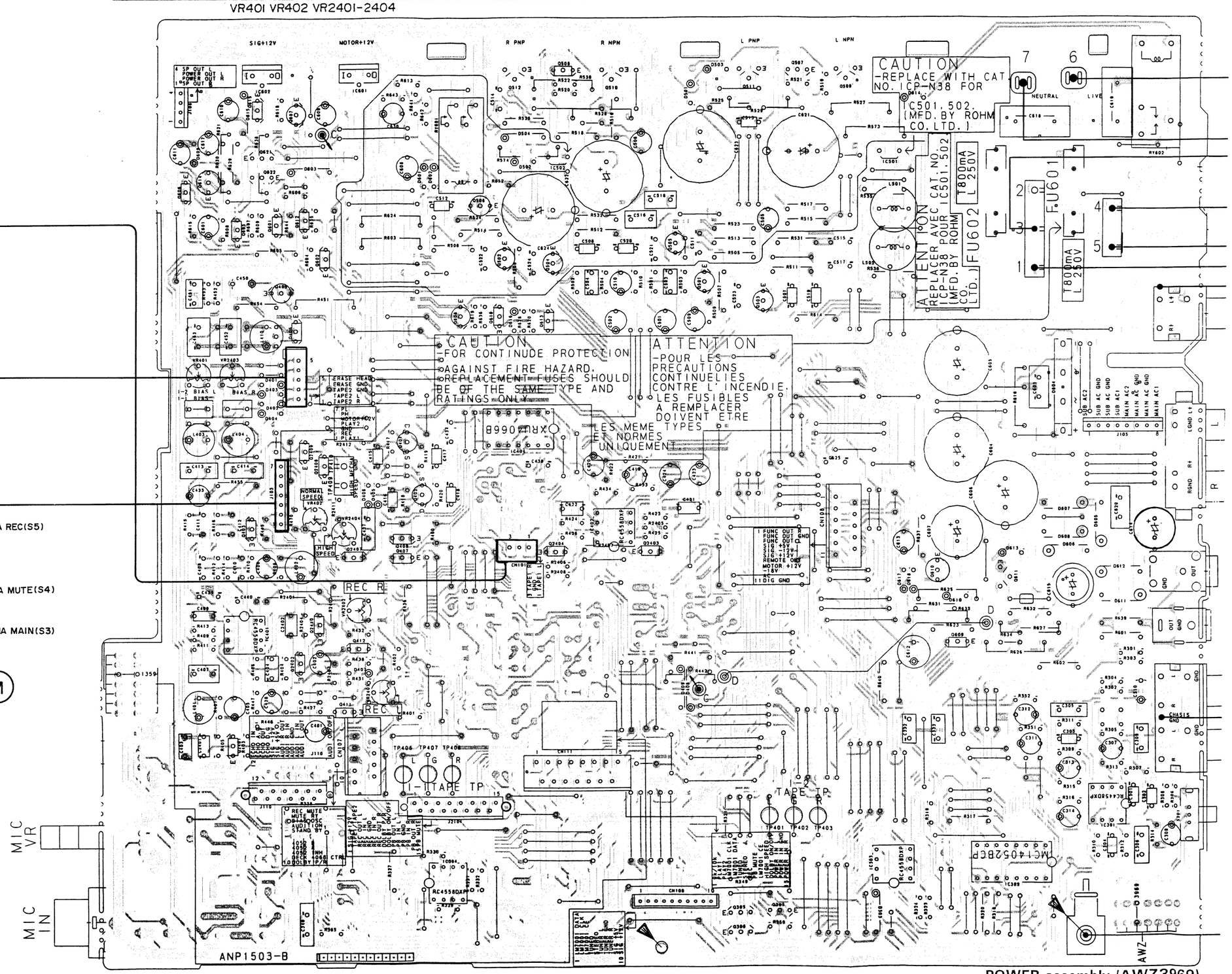

POWER assembly (AWZ3969)

This P. C. B connection diagram is viewed from the parts mounted side.

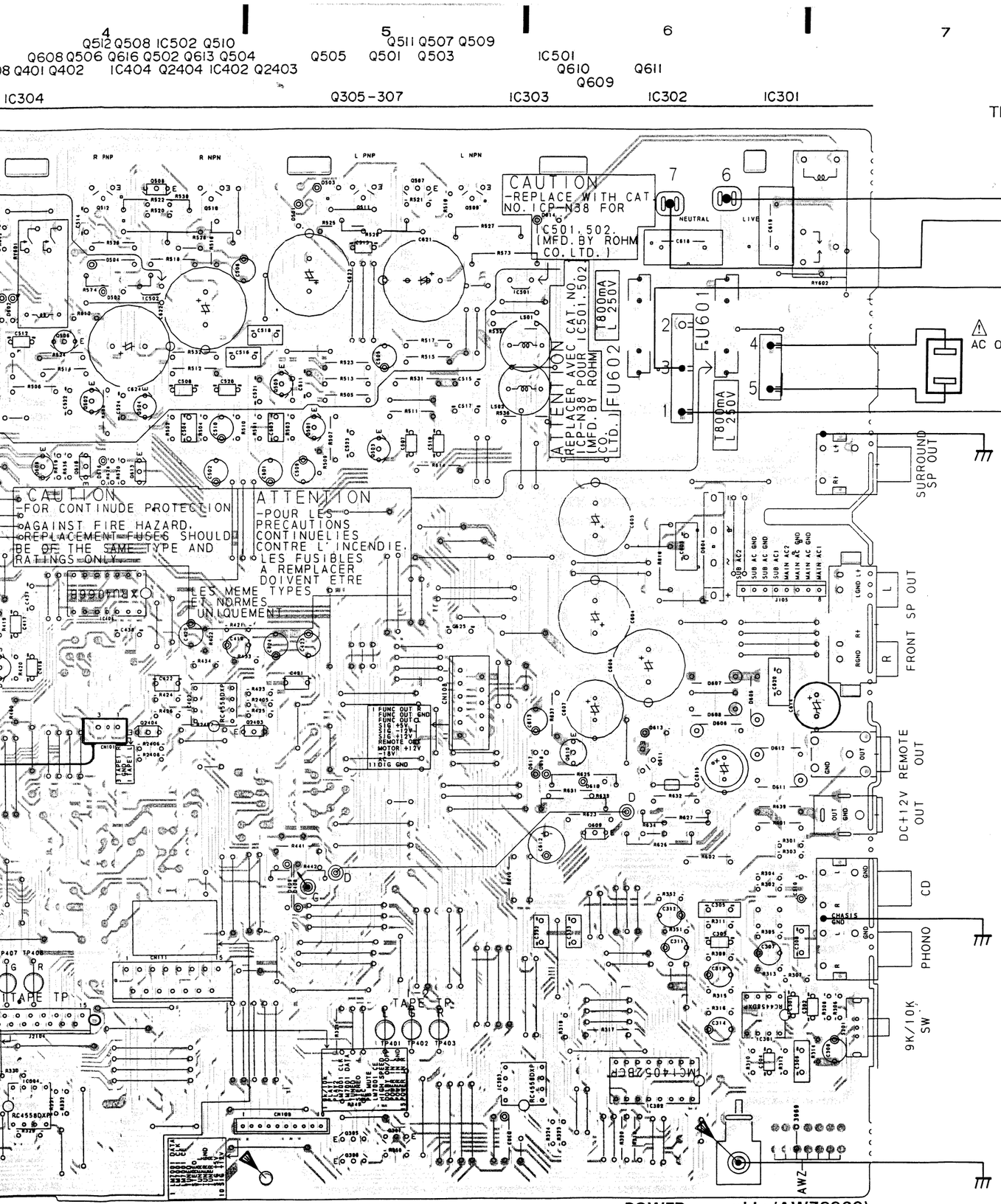

POWER assembly (AWZ3969)

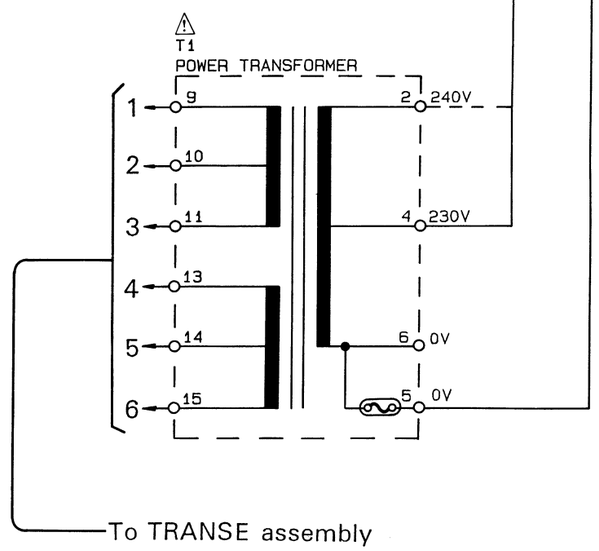

NOTE

1. This P.C.B connection diagram is viewed from the parts mounted side.
2. The parts which have been mounted on the board can be replaced with those shown with the corresponding wiring symbols listed in the following Table.

P.C.B. pattern diagram indication	Corresponding part symbol	Part Name
Q504	E or E	Transistor
Q215	or	Radiator type transistor
D203	D203	Diode
R237	R237	Resistor
C513	+	Capacitor (Polarized)
C518		Capacitor (Non-polarized)

Others

P.C.B. pattern diagram indication	Part Name
IC	IC
S	Switch
RY	Relay
L	Coil
F	Filter
VR	Variable resistor or Semi-fixed resistor

3. The capactor terminal marked with ◎ (double circles) shows negatine terminal.
4. The diode terminal marked with ◎ (double circles) shows cathode side.
5. The transistor terminal to which E is affixed shows the emitter.

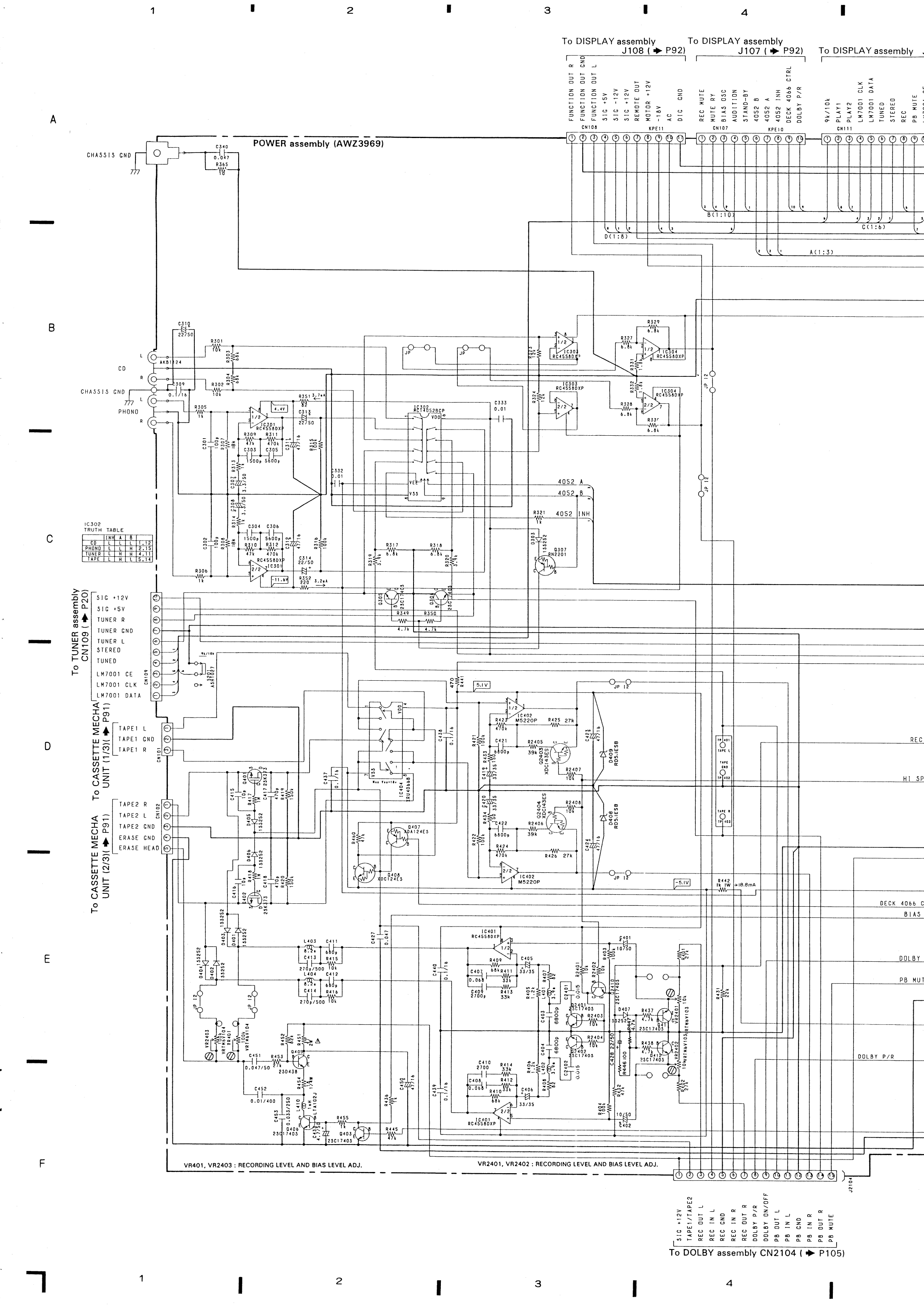
To DISPLAY assembly J108 (➡ P92)
To DISPLAY assembly J107 (➡ P92)
To DISPLAY assembly
FUNCTION OUT R
FUNCTION OUT GND
FUNCTION OUT L
SIG +5V
SIG -12V
SIG +12V
REMOTE OUT
MOTOR +12V
-18V
AC
DIG GND
REC MUTE
MUTE RY
BIAS OSC
AUDITION
STAND-BY
4052 B
4052 A
4052 INH
DECK 4066 CTRL
DOLBY P/R
9k/10k
PLAY1
PLAY2
LM7001 CLK
LM7001 DATA
TUNED
STEREO
REC
PB MUTE
CN108
KPE11
CN107
KPE10
CN111
B(1:10)
C(1:6)
D(1:8)
A(1:3)
POWER assembly (AWZ3969)
CHASSIS GND
CD
PHONO
IC302 TRUTH TABLE
To TUNER assembly CN109 (➡ P20)
SIG +12V
SIG +5V
TUNER R
TUNER GND
TUNER L
STEREO
TUNED
LM7001 CE
LM7001 CLK
LM7001 DATA
To CASSETTE MECHA UNIT (1/3)(➡ P91)
TAPE1 L
TAPE1 GND
TAPE1 R
To CASSETTE MECHA UNIT (2/3)(➡ P91)
TAPE2 R
TAPE2 L
TAPE2 GND
ERASE GND
ERASE HEAD
4052 A
4052 B
4052 INH
REC
HI SP
DECK 4066 C
BIAS
DOLBY
PB MUT
DOLBY P/R
VR401, VR2403 : RECORDING LEVEL AND BIAS LEVEL ADJ.
VR2401, VR2402 : RECORDING LEVEL AND BIAS LEVEL ADJ.
SIG +12V
TAPE1/TAPE2
REC OUT L
REC IN L
REC GND
REC IN R
REC OUT R
DOLBY P/R
DOLBY ON/OFF
PB OUT L
PB IN L
PB GND
PB IN R
PB OUT R
PB MUTE
To DOLBY assembly CN2104 (➡ P105)

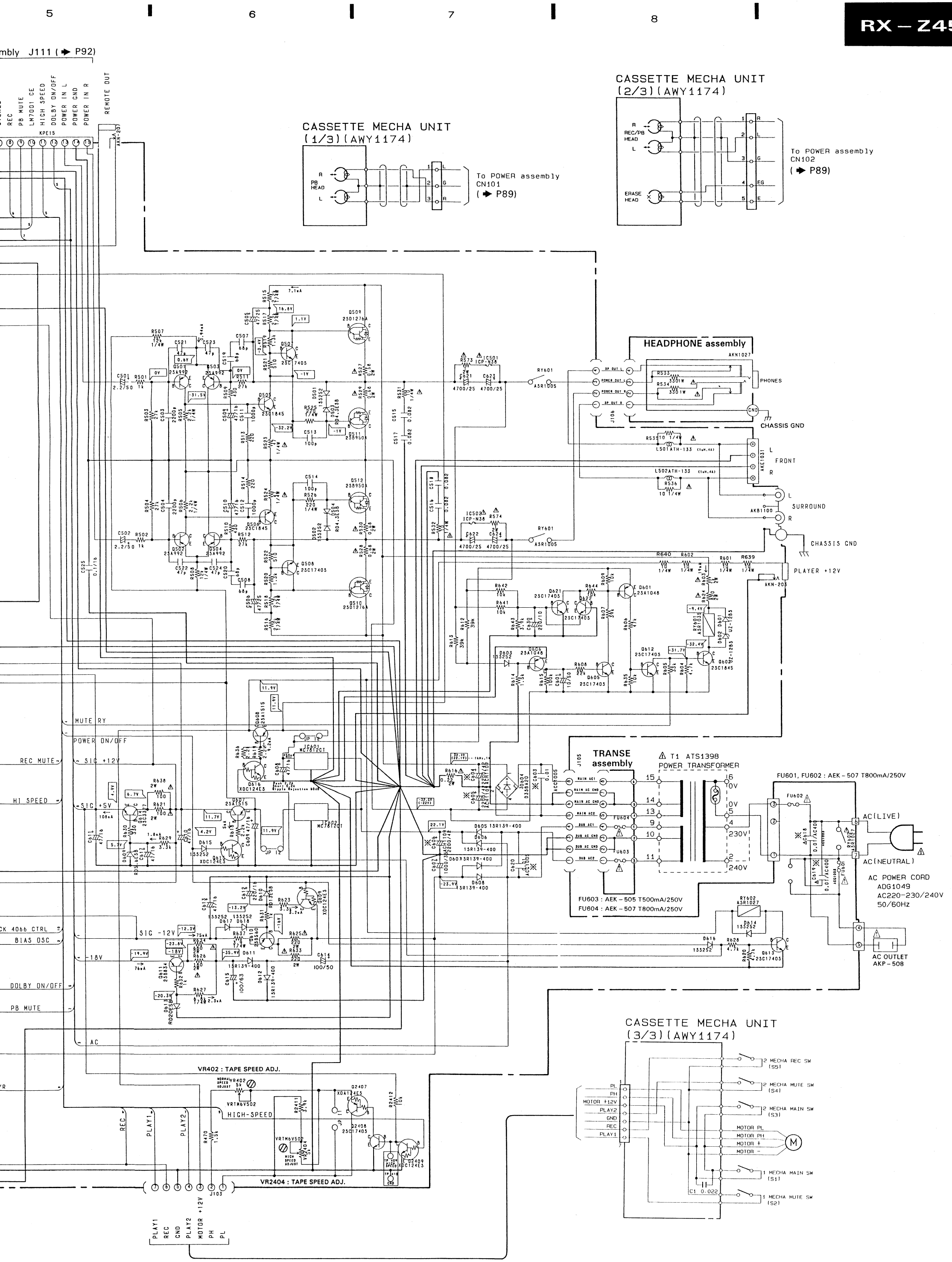
5
6
7
8
mbly J111 (➡ P92)
REC
PB MUTE
LM7001 CE
HIGH SPEED
DOLBY ON/OFF
POWER IN L
POWER GND
POWER IN R
REMOTE OUT
KPE15
AKN-207
CASSETTE MECHA UNIT
(1/3)(AWY1174)
PB HEAD
To POWER assembly
CN101
(➡ P89)
CASSETTE MECHA UNIT
(2/3)(AWY1174)
REC/PB HEAD
ERASE HEAD
To POWER assembly
CN102
(➡ P89)
HEADPHONE assembly
AKN1027
PHONES
CHASSIS GND
FRONT
SURROUND
AKB1100
PLAYER +12V
AKN-203
MUTE RY
POWER ON/OFF
REC MUTE
HI SPEED
SIG +5V
SIG -12V
BIAS OSC
-18V
DOLBY ON/OFF
PB MUTE
AC
TRANSE assembly
T1 ATS1398
POWER TRANSFORMER
FU601, FU602 : AEK – 507 T800mA/250V
FU603 : AEK – 505 T500mA/250V
FU604 : AEK – 507 T800mA/250V
AC(LIVE)
AC(NEUTRAL)
AC POWER CORD
ADG1049
AC220-230/240V
50/60Hz
AC OUTLET
AKP – 508
VR402 : TAPE SPEED ADJ.
HIGH-SPEED
VR2404 : TAPE SPEED ADJ.
J103
PLAY1
REC
GND
PLAY2
MOTOR +12V
PH
PL
CASSETTE MECHA UNIT
(3/3)(AWY1174)
2 MECHA REC SW (S5)
2 MECHA MUTE SW (S4)
2 MECHA MAIN SW (S3)
MOTOR PL
MOTOR PH
MOTOR +
MOTOR –
1 MECHA MAIN SW (S1)
1 MECHA MUTE SW (S2)
C1 0.022

6.3.3 DISPLAY ASSEMBLY AND VOLUME ASSEMBLY

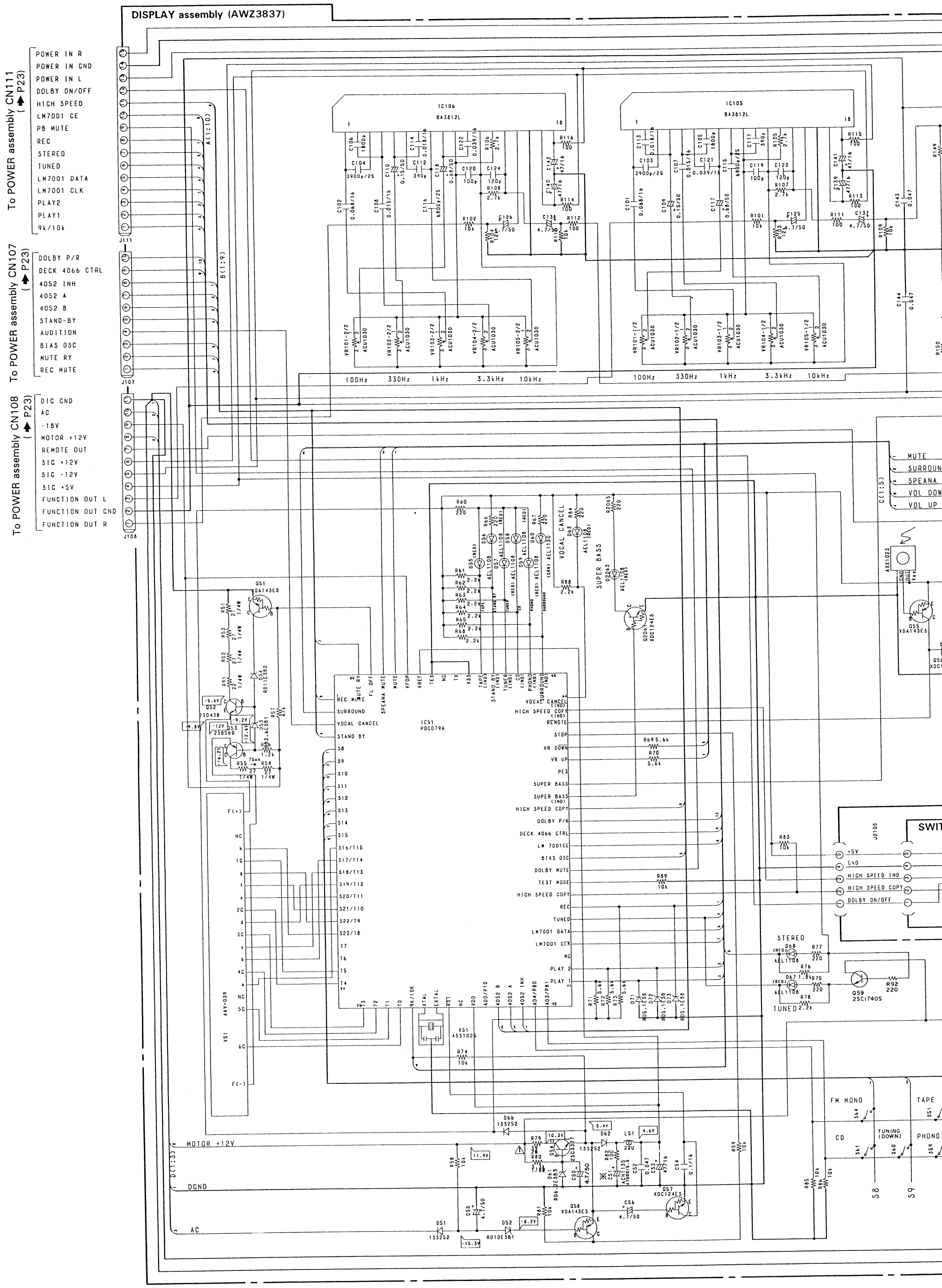

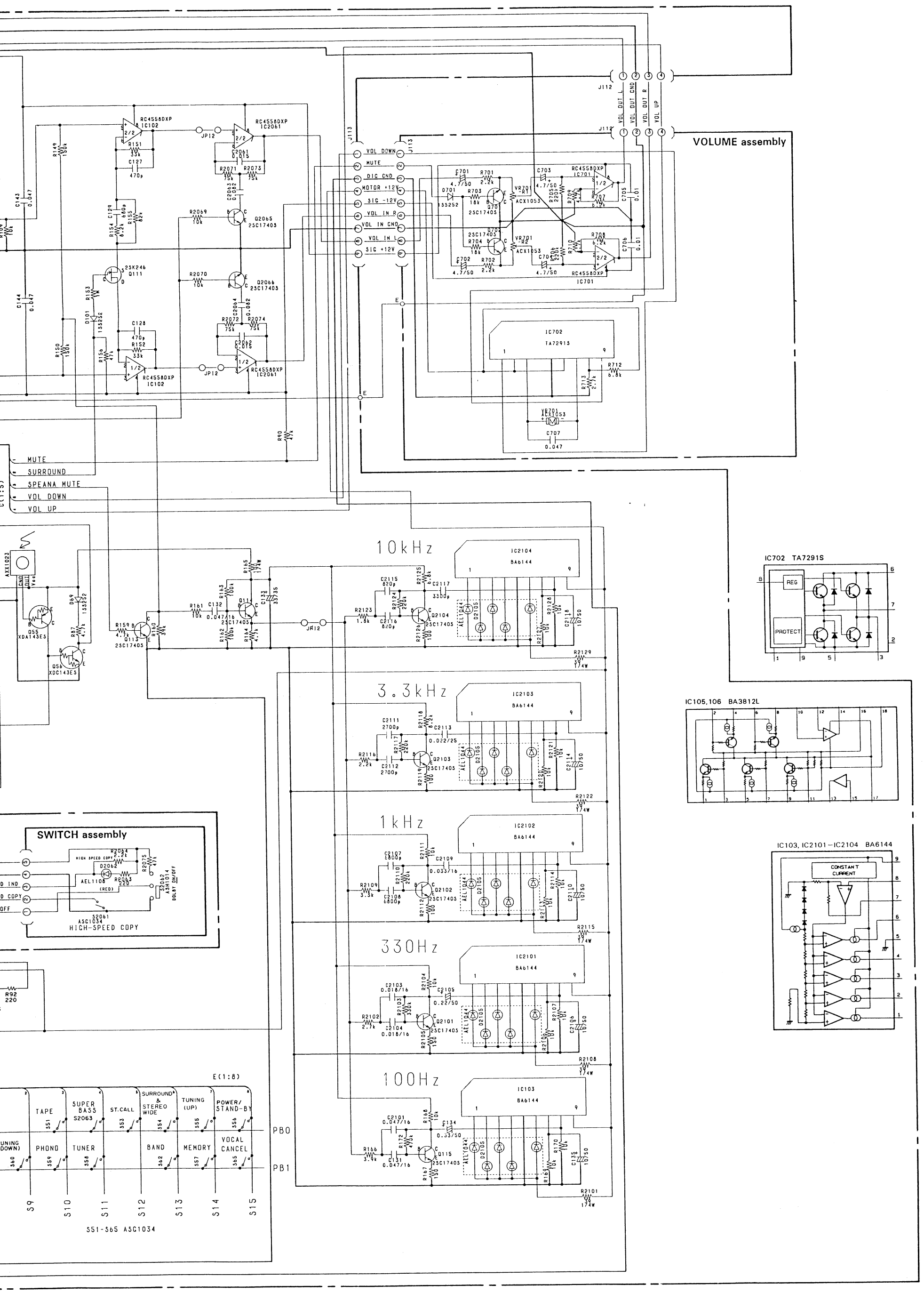
VOLUME assembly
VOL DOWN
MUTE
DIG GND
MOTOR +12V
SIG -12V
VOL IN R
VOL IN GND
VOL IN L
SIG +12V
VOL OUT L
VOL OUT GND
VOL OUT R
VOL UP
MUTE
SURROUND
SPEANA MUTE
VOL DOWN
VOL UP
SWITCH assembly
HIGH-SPEED COPY
10kHz
3.3kHz
1kHz
330Hz
100Hz
IC702 TA7291S
IC105,106 BA3812L
IC103, IC2101–IC2104 BA6144
CONSTANT CURRENT
REG
PROTECT
TAPE
SUPER BASS
ST.CALL
SURROUND & STEREO WIDE
TUNING (UP)
POWER/ STAND-BY
PHONO
TUNER
BAND
MEMORY
VOCAL CANCEL
SS1-S65 ASC1034

This P. C. B connection diagram is viewed from the parts mounted sid

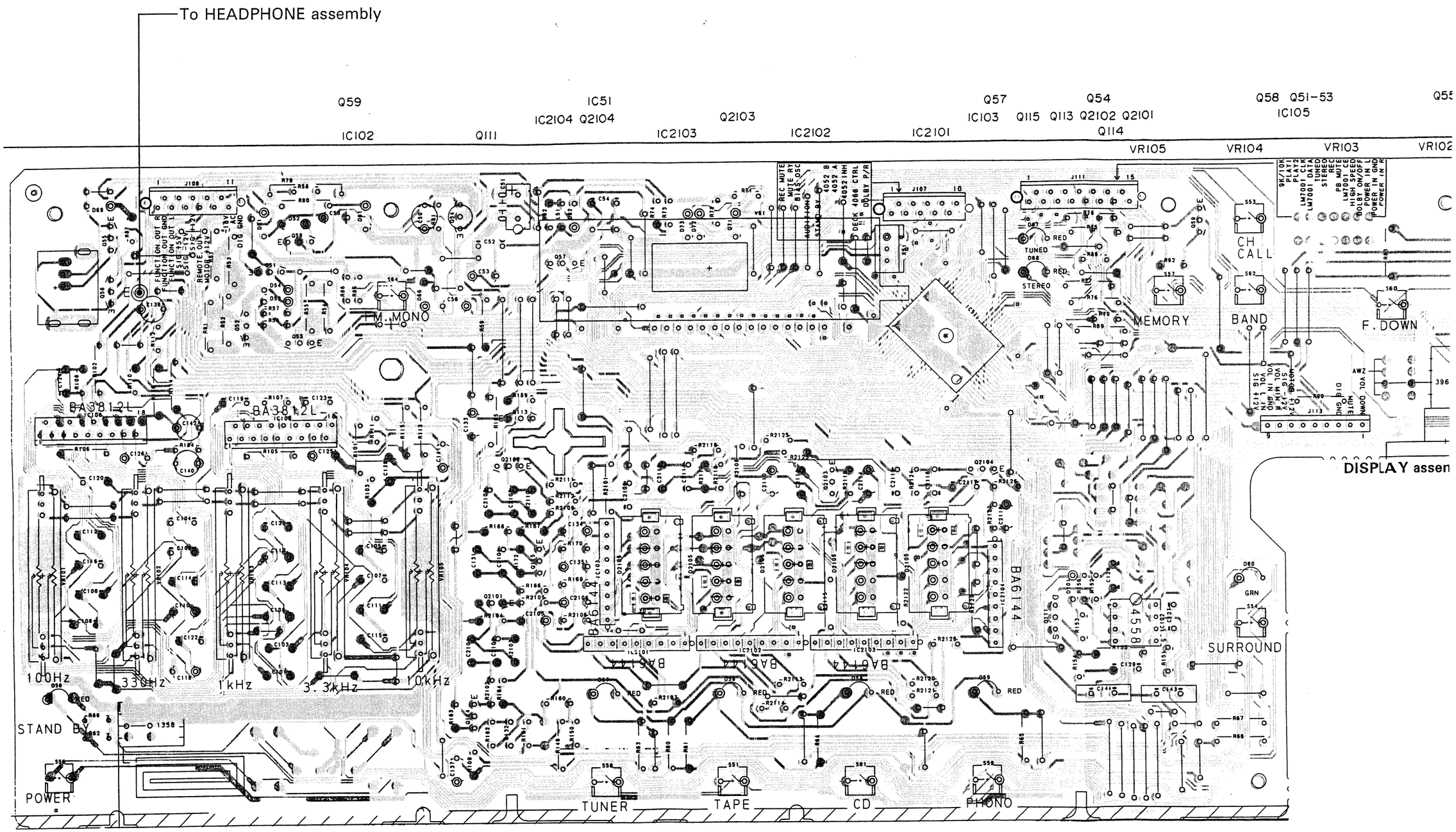

This P. C. B connection diagram is viewed from the parts mounted side.

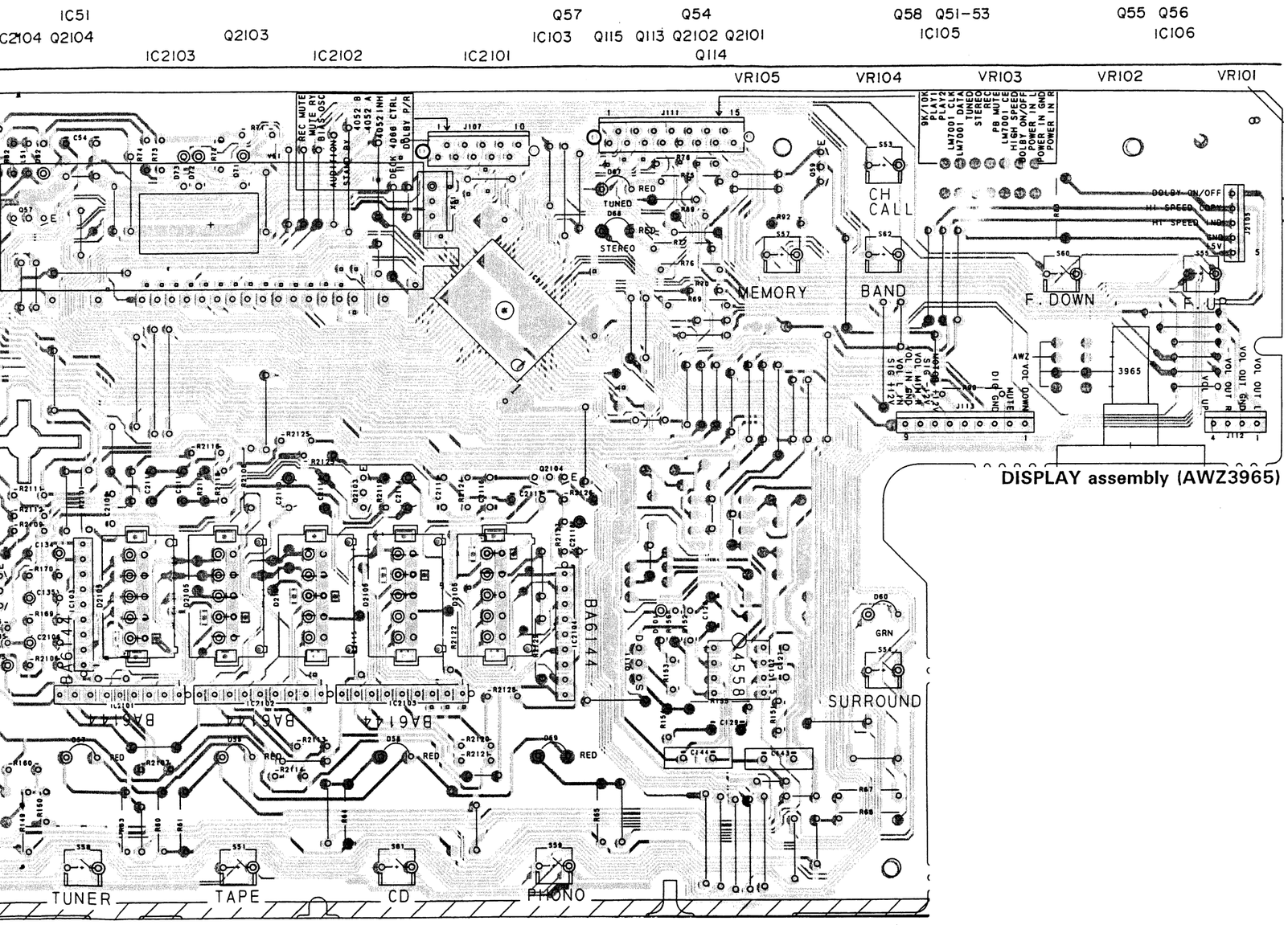

NOTE

1. This P.C.B connection diagram is viewed from the parts mounted side.
2. The parts which have been mounted on the board can be replaced with those shown with the corresponding wiring symbols listed in the following Table.

P.C.B. pattern diagram indication	Corresponding part symbol	Part Name
Q504 (E)	E or E	Transistor
Q215	or	Radiator type transistor
D203	D203	Diode
R237	R237	Resistor
C513	+	Capacitor (Polarized)
C518		Capacitor (Non-polarized)

Others

P.C.B. pattern diagram indication	Part Name
IC	IC
S	Switch
RY	Relay
L	Coil
F	Filter
VR	Variable resistor or Semi-fixed resistor

3. The capactor terminal marked with ◎(double circles) shows negatine terminal.
4. The diode terminal marked with ◎(double circles) shows cathode side.
5. The transistor terminal to which E is affixed shows the emitter.

This P. C. B. connection diagram is viewed from the foil side.

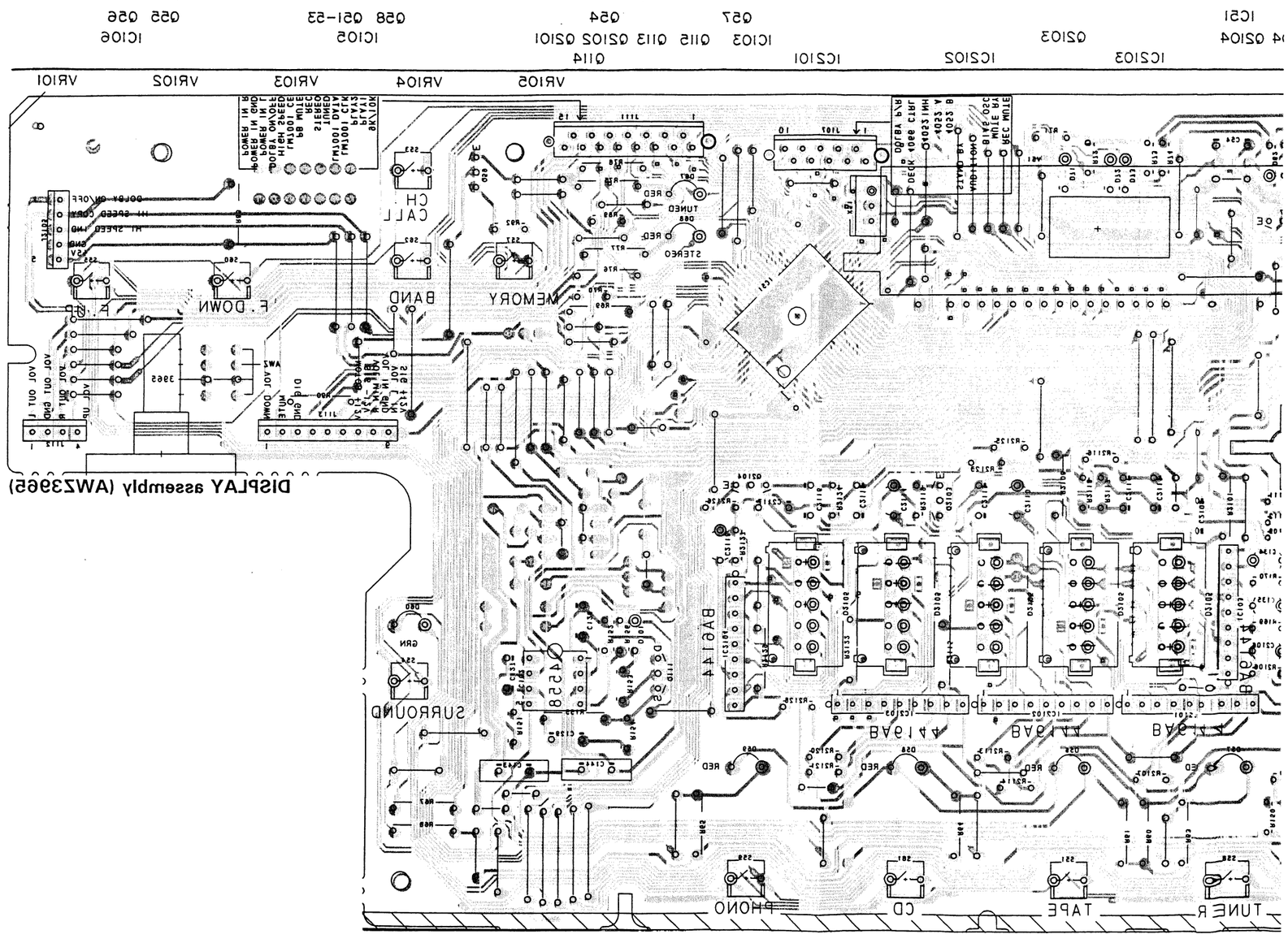

P. C. B. connection diagram is viewed from the foil side.

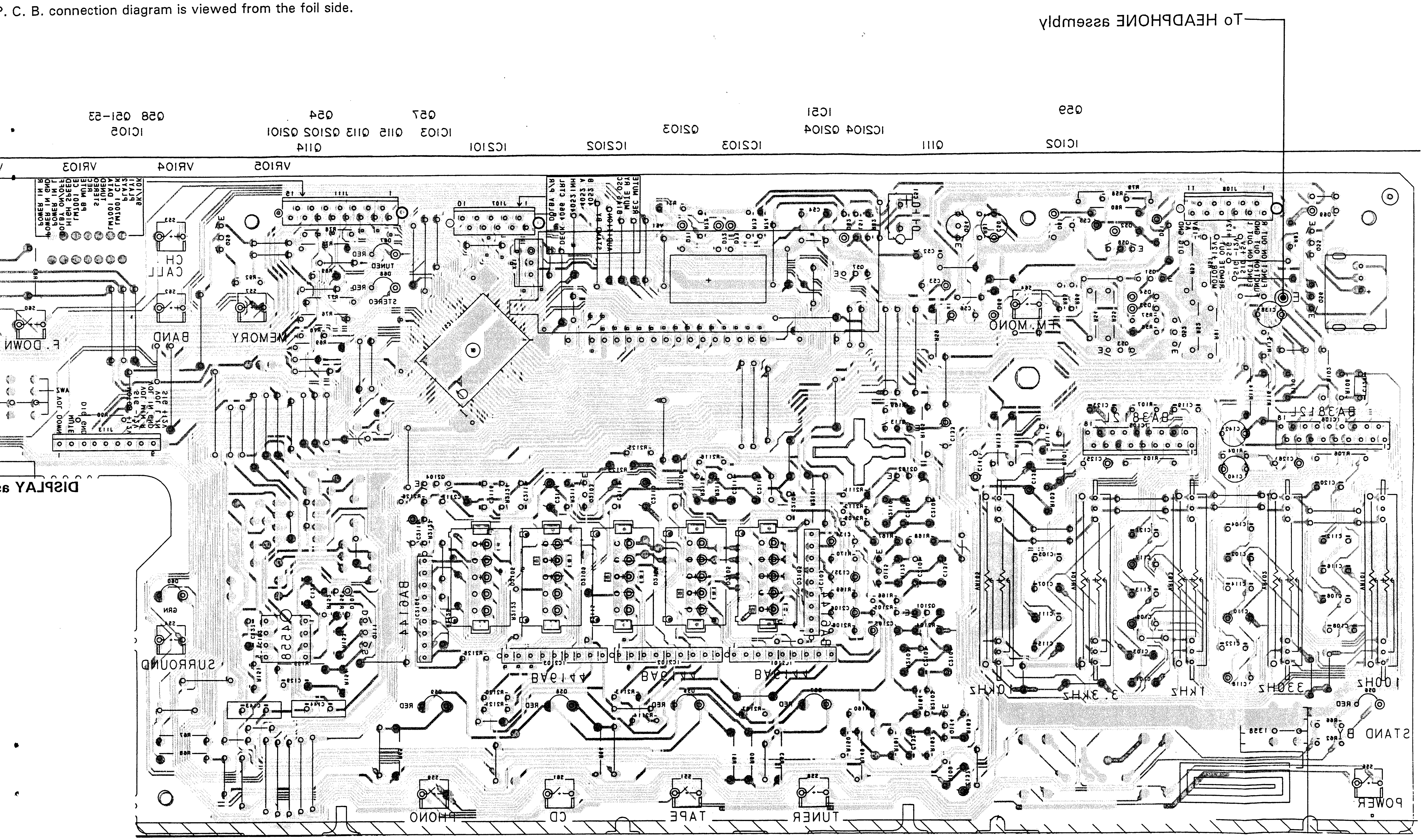

6.3.4 DOLBY ASSEMBLY

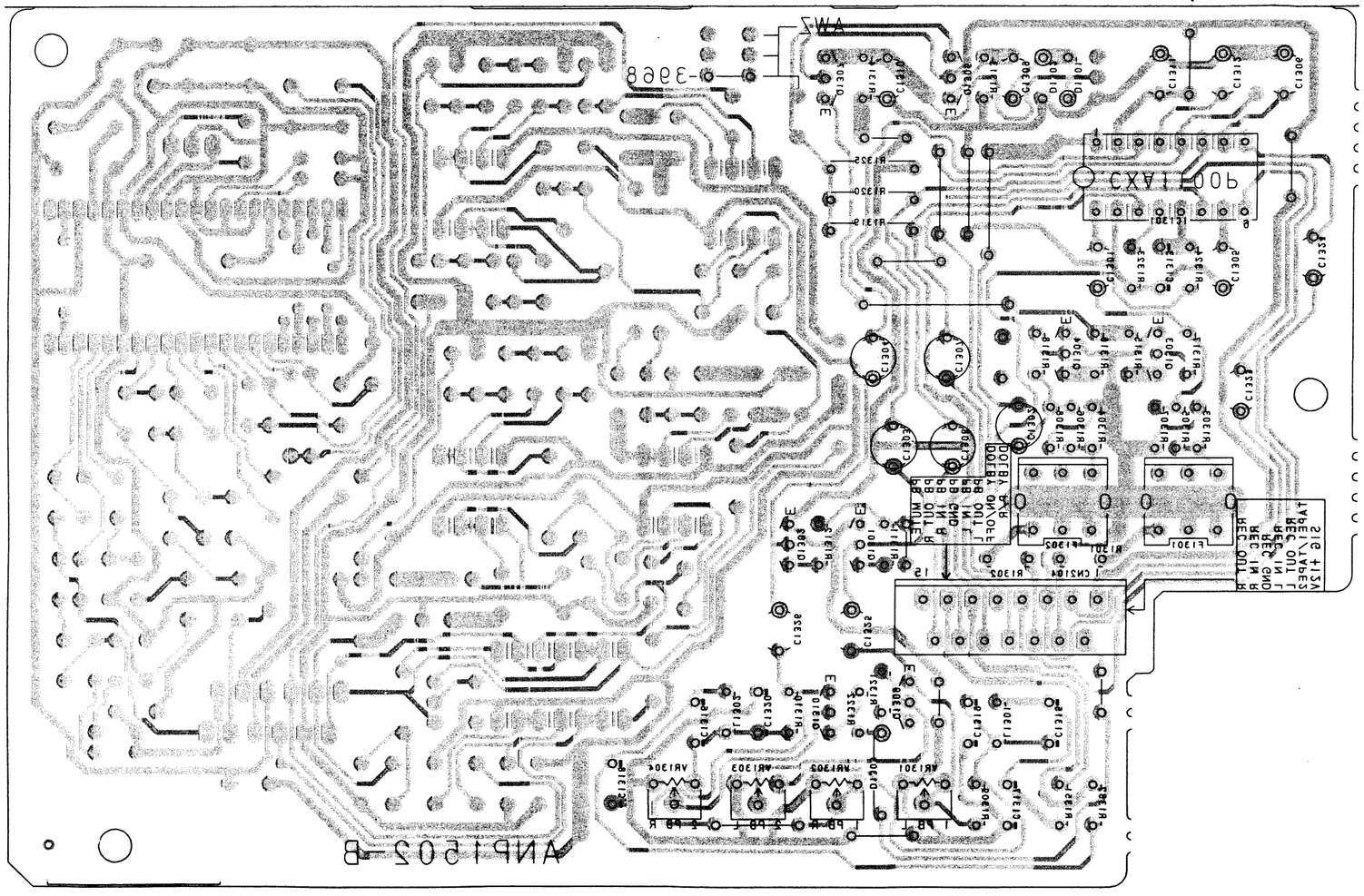

This P. C. B. connection diagram is viewed from the foil side.

IC1301 Q1303 Q1304 Q1305 Q1307 Q1301 Q1302 Q1309 Q1310

DOLBY assembly (AWZ3968)

VR1301 VR1302 VR1303 VR1304

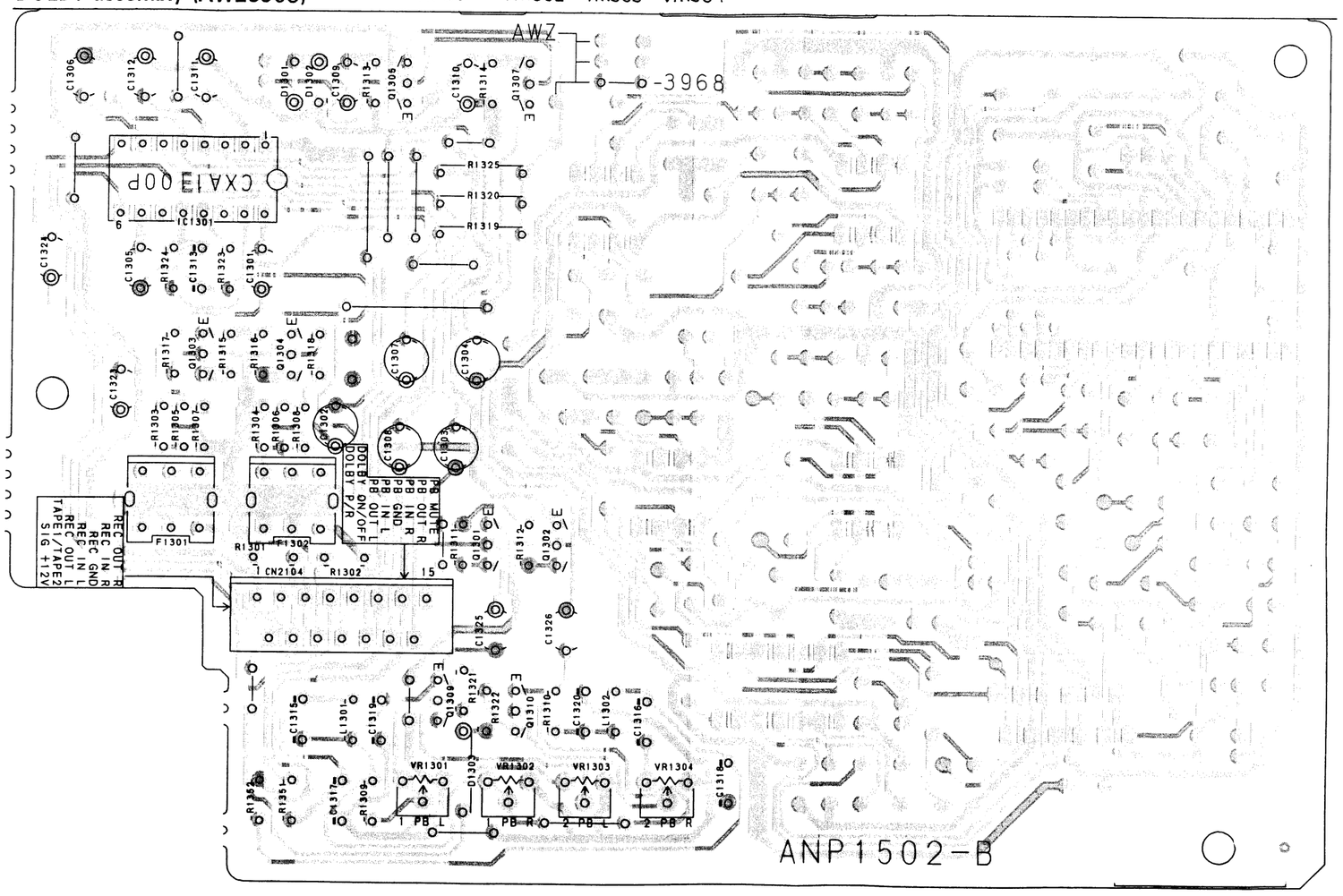

NOTE

1. This P.C.B connection diagram is viewed from the parts mounted side.
2. The parts which have been mounted on the board can be replaced with those shown with the corresponding wiring symbols listed in the following Table.

P.C.B. pattern diagram indication	Corresponding part symbol	Part Name
Q504 (E)	E or E	Transistor
Q215	or	Radiator type transistor
D203	D203	Diode
R237	R237	Resistor
C513	+	Capacitor (Polarized)
C518		Capacitor (Non-polarized)

Others

P.C.B. pattern diagram indication	Part Name
IC	IC
S	Switch
RY	Relay
L	Coil
F	Filter
VR	Variable resistor or Semi-fixed resistor

3. The capacitor terminal marked with ◎(double circles) shows negatine terminal.
4. The diode terminal marked with ◎(double circles) shows cathode side.
5. The transistor terminal to which E is affixed shows the emitter.

This P. C. B connection diagram is viewed from the parts mounted side.

IC1301 CXA1100P

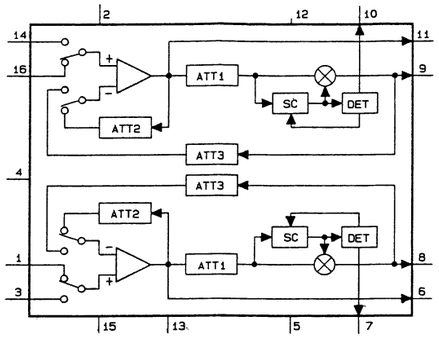

DOLBY assembly (AWZ3968)

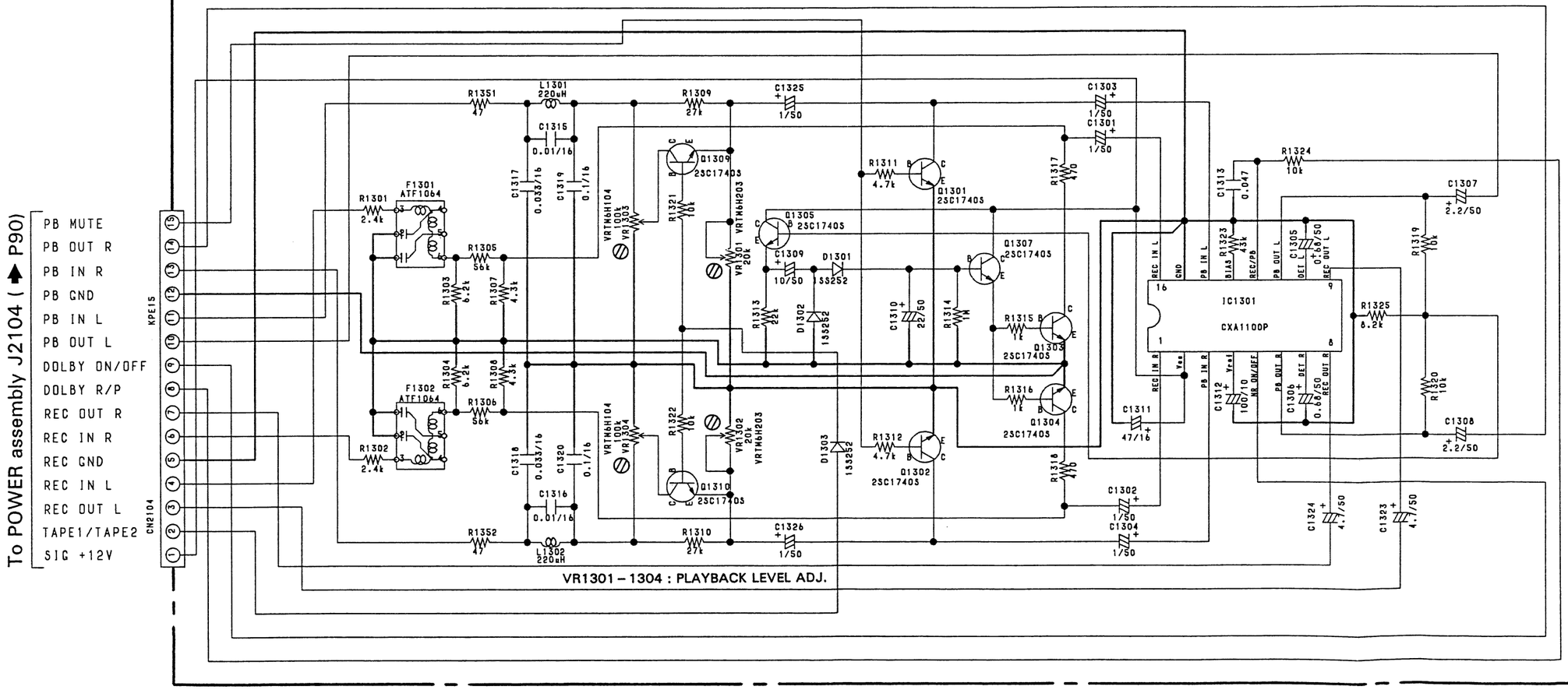

6.3.5 POWER SUPPLY SECTION (RX – Z35/YPWXJ)

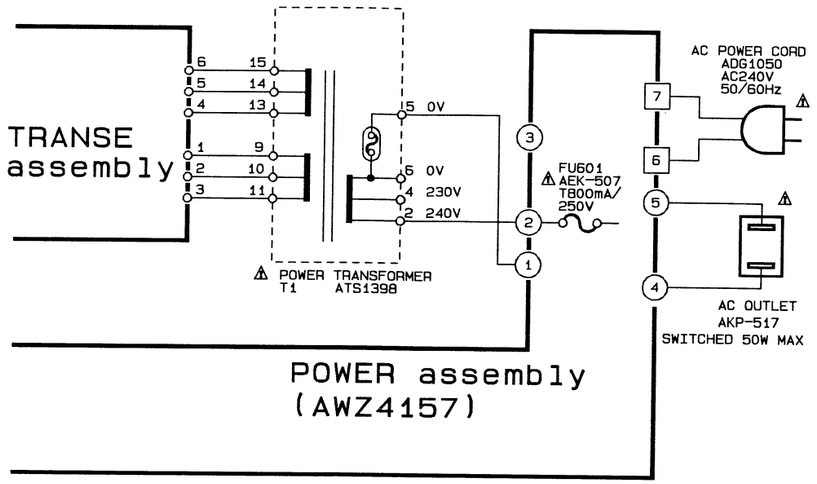

1. RESISTORS:
   Indicated in Ω, ¼W, ⅛W, ±5% tolerance unless otherwise noted k : kΩ,
   M : MΩ, (F) : ±1%, (G) : ±2%, (K) : ±10% (M); ±20% tolerance

2. CAPACITORS:
   Indicated in capacity (μF)/voltage (V) unless otherwise noted p : pF
   Indication without voltage is 50V except electrolytic capacitor.

3. VOLTAGE, CURRENT:
   [V] : Signal voltage at rated output.
   [ ] : DC voltage (V) at no input signal
   Value in ( ) is DC voltage at rated power.
   ⇦ mA : DC current at no input signal
   mV : Signal voltage at FM 1kHz ±75kHz DEV.

4. OTHERS:
   ➡ : Signal route.
   ⊘ : Adjusting point.
   The ⚠ mark found on some component parts indicates the importance of the safety factor of the part. Therefore, when replacing, be sure to use parts of identical designation.
   ※ marked capacitors and resistors have parts numbers.
   This is the basic schematic diagram, but the actual circuit may vary due to improvements in design.

5. SWITCHES (The underline indicates the switch position)

POWER assembly
S201 CHANNEL STEP (9k/10k)

SWITCH assembly
S2061 HIGH-SPEED COPY
S2062 DOLBY NR ON/OFF

DISPLAY assembly
S51 TAPE
S53 ST. CALL
S54 SURROUND & STEREO WIDE
S55 TUNING (UP)
S56 POWER/STANDBY
S57 MEMORY
S58 TUNER
S59 PHONO
S60 TUNING (DOWN)
S61 CD
S62 BAND
S64 FM MONO
S65 VOCAL CANCEL
S2063 SUPER BASS

7. PANEL FACILITIES

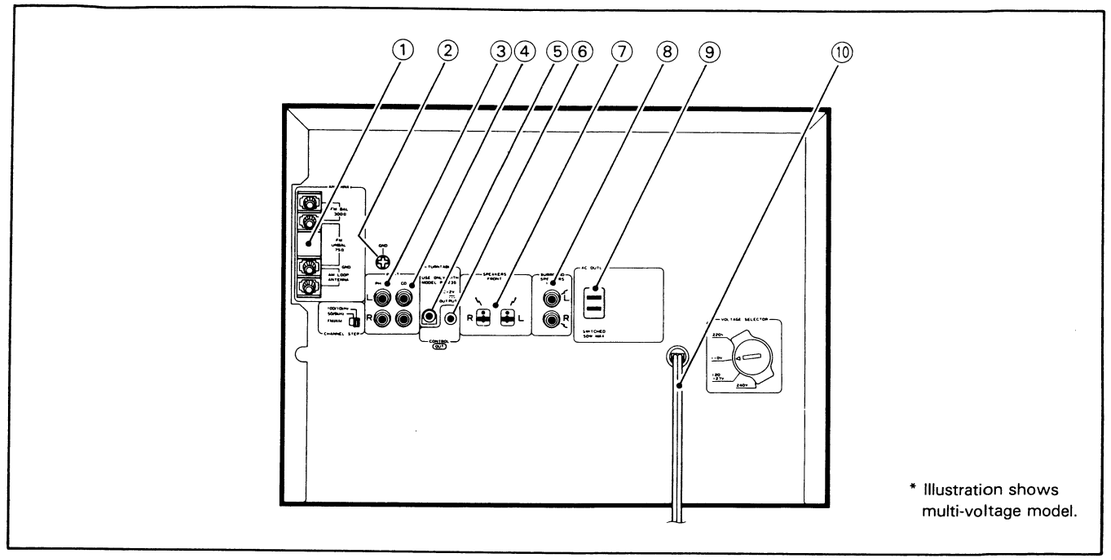

* Illustration shows multi-voltage model.

REAR PANEL FACILITIES

Cassette deck receiver: RX-Z15/RX-Z35/RX-Z45

① FM/AM ANTENNA terminals
Antennas must be connected to these terminals: otherwise you will not be able to receive stations.

② Ground terminal (GND)
Connect this to the ground terminal on the turntable (except for PL-Z85).

③ PHONO input jacks
Connect the audio cord of the turntable to these jacks.

④ CD input jacks
Connect to output jacks of a CD player.

⑤ TURNTABLE (DC 12 V OUTPUT) jack
This jack supplies power to the turntable PL-Z85.
Connect the power supply cord of the turntable to this jack.

For U.S. model:
In the U.S.A., model PL-Z85 is not sold, so do not use this jack.
If you are using a turntable, be sure that it is a PIONEER model.

⑥ CONTROL OUT jack
Connect to a compact disc player PD-Z65, PD-Z75T, PD-Z74T or PD-Z85M CONTROL jack.

For U.S. model:
In the U.S.A., only the PD-Z85M can be connected.

⑦ SPEAKERS jacks
Connect exclusive S-Z35D speakers to these jacks.
L: Connect the left speaker system as seen from the listening position.
R: Connect the right speaker system as seen from the listening position.

⑧ SURROUND SPEAKERS jacks
Connect the surround speaker systems.

NOTE:
Connect a speaker system having a nominal impedance of 16 Ω or more.

⑨ AC OUTLET (SWITCHED 50 W MAX)
Power supplied through this outlet is turned on and off by the cassette deck receiver's POWER switch. Total electrical power consumption of connected equipment should not exceed 50 W.

[U.S. and Canadian models]
AC OUTLET (SWITCHED 50 W (0.4 A) MAX)
Power supplied through this outlet is turned on and off by the cassette deck receiver's POWER switch. Total electrical power consumption of connected equipment should not exceed 50 W (0.4 A).

NOTE:
Do not connect appliances with high power consumption such as heaters, irons, or television sets to the AC OUTLET in order to avoid overheating or fire hazard.
This can cause the cassette deck receiver to malfunction.

⑩ Power cord
Connect this to the household electrical outlet.

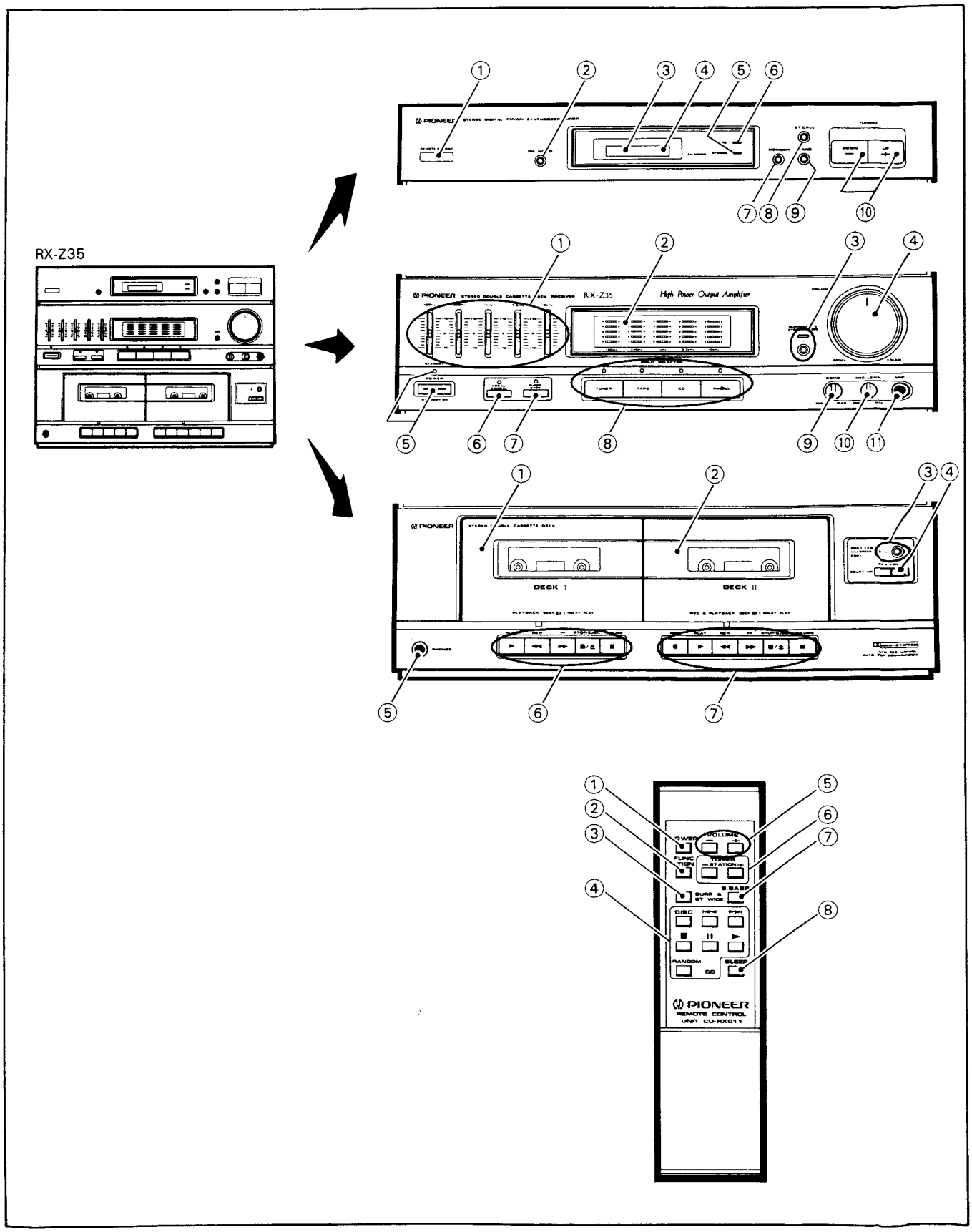
RX-Z35
PIONEER
RX-Z35
High Power Output Amplifier
DECK I
DECK II
VOLUME
TUNER
STATION
DISC
RANDOM
CD
SLEEP
PIONEER
REMOTE CONTROL
UNIT CU-RX011

FRONT PANEL FACILITIES

Cassette deck receiver RX-Z15/RX-Z35/RX-Z45

• Illustration shows model RX-Z35.

[Tuner Section]

① Remote sensor window (REMOTE SENSOR)

② FM MONO button

Turn on when there is much noise during reception of FM stereo broadcasts. The reproduced sound will become monaural but noise will be reduced.

③ Display section

Shows received broadcast frequency or station call no.
FM and MHz light: FM reception.
AM and kHz light: AM reception.
Ch display: station call no. display

④ FM MONO indicator

Lights when the FM MONO button is set to ON. When this indicator is lit, FM stereo broadcasts are reproduced monaurally.

⑤ STEREO indicator

Lights when an FM stereo broadcast is received (FM MONO button set to OFF).

⑥ TUNED indicator

Lights when a broadcast is received and tuned in well.

⑦ MEMORY button

Used for memorizing stations

⑧ ST. (Station) CALL button

Use to switch between frequency display and station no. display.
During frequency display, you can use the + and – buttons ⑩ to raise or lower the received frequency.
During station no. display, you can use the + and – buttons ⑩ to raise or lower the received station number.

⑨ BAND selector button

Each time this button is pressed, FM or AM reception is selected alternately.

⑩ +, – (UP, DOWN) buttons

Used for locating stations.
Use "–" button for lower, and "+" button for higher station no. or frequencies.

[Amplifier and Graphic Equalizer Section]

① Graphic equalizer controls

② Spectrum analyzer display (RX-Z35, RX-Z45)
Level indicator (RX-Z15)

③ SURROUND & STEREO WIDE button/indicator

By turning this switch ON, you can enjoy surround reproduction when rear speakers are used.
By turning this switch ON, you can enjoy STEREO WIDE reproduction with greater left-right spread when rear speakers are not used.
The indicator lights when SURROUND & STEREO WIDE is on.

NOTE:
In the case of monaural source, SURROUND & STEREO WIDE effects cannot be obtained.

④ VOLUME control

⑤ POWER STANDBY/ON switch /STANDBY indicator

This is the switch for electric power.

ON : When set to the ON position, power is supplied and the unit becomes operational.

STANDBY : When set to the STANDBY position, the main power flow is cut and the unit is no longer fully operational. A minute flow of power feeds the unit to maintain operation readiness.
The unit is in STANDBY when only the STANDBY indicator above the POWER switch is lit.
Press the SLEEP button on the remote control to operate the sleep timer, and the STANDBY indicator flashes to show that the sleep timer is operating.

⑥ VOCAL CANCEL button/indicator (RX-Z15, RX-Z35)

When set to ON, the sound volume of vocal sound is lowered.

⑦ SUPER BASS button/indicator (RX-Z35 only)

Set to ON to augment bass frequency response.

⑧ INPUT SELECTOR buttons

[TUNER]
Press to listen to radio broadcast.
[TAPE]
Press to listen to cassette tape.
[CD]
Press to listen to a CD player connected to the CD jacks.
[PHONO]
Press to play records on a turntable connected to the PHONO jacks.

⑨ ECHO control (RX-Z35 only)

Use to control the echo level of the microphone connected to the MIC jack.

⑩ MIC LEVEL control (RX-Z15, RX-Z35)

Used for adjusting the volume of the microphone.

⑪ MIC (Microphone) jack (RX-Z15, RX-Z35)

This is a standard jack for connecting a microphone.

[Cassette Deck Section]

- Use TYPE I (normal) tape.
- Tapes can be played back on Deck I; tapes can be played back and recorded on Deck II.

① Deck I cassette door

② Deck II cassette door

③ HI-SPEED COPY button/indicator (RX-Z35, RX-Z45, and RX-Z15 U.S. and Canadian models)

Used for high-speed tape copying. Copying at about twice normal tape speed.

④ DOLBY* NR switch (RX-Z35, RX-Z45, and RX-Z15 U.S. and Canadian models)

Set this switch to the ON position to activate the DOLBY NR system.

- Tapes recorded using Dolby noise reduction should always be played back with the noise reduction system on. Sound quality will be adversely affected if played back with the system off, or if tapes recorded using a different noise reduction system are played back with the Dolby NR system on.
- It is recommended that tapes recorded with Dolby B type NR be so marked on the label. This will help prevent incorrect setting of the noise reduction switch during playback.

*

Dolby noise reduction manufactured under license from Dolby Laboratories Licensing Corporation.
"DOLBY" and the double-D symbol DD are trademarks of Dolby Laboratories Licensing Corporation.

⑤ PHONES (Headphones) jack

For stereo headphones.

NOTE:
There is no output from the speakers when headphones are plugged into PHONES jack.

⑥ Deck I operation buttons

► (PLAY)..... For playing back a tape.
►► (F.F.)..... Fast forward.
◄◄ (REW)..... Rewind.
■/⏏ (STOP/EJECT).... Press to stop playback. Pressing when the deck has stopped playing opens the cassette door.
II (PAUSE)..... Temporarily stops tape travel. Cancels pause mode when pressed again.

⑦ Deck II operation buttons

● (REC)..... Press this button, and the ► button is simultaneously pressed for you to start recording.
► (PLAY)..... For playing back a tape
►► (F.F.)..... Fast forward
◄◄ (REW)..... Rewind
■/⏏ (STOP/EJECT).... Press to stop recording or playback, and to eject the cassette tape.
II (PAUSE)..... Press to pause during playback or recording. To cancel the pause mode, press again.

Remote control unit

① POWER button

② FUNCTION button

Each time you press this button, the input selector changes.

③ SURR. & ST WIDE button

Turns SURROUND & STEREO WIDE on and off.

④ CD operation buttons

Perform the connections so that the CD player is operated by the remote control unit.

► ..... Play
|◄◄, ►►|... Track search
■..... Stop
II..... Pause
DISC..... Use to select discs on the twin-tray CD player (PD-Z75T) and the Multi-play CD player (PD-Z85M).
RANDOM ... Press when you want to enjoy random play on the CD player.

⑤ VOLUME + (UP) and – (DOWN) buttons

When pressed, VOLUME on the receiver is actually moved by a motor.

⑥ TUNER STATION + and – buttons

- Before operation, memorize broadcast stations.

+ ... Stations change in order in the upward direction
– ... Stations change in order in the downward direction.

⑦ S.BASS button (RX-Z35 only)

Switches S.BASS (SUPER BASS) ON and OFF.

⑧ SLEEP button

Sets the sleep timer. Press this button to set the 60 minute sleep timer.

The receiver input selector automatically switches to the music source being operated when you press the CD playback (►), cassette deck playback (►), or tuner station controls.

NOTE:
It is not possible to operate the CD player with the remote control unless the control cord is connected.

Range of remote control

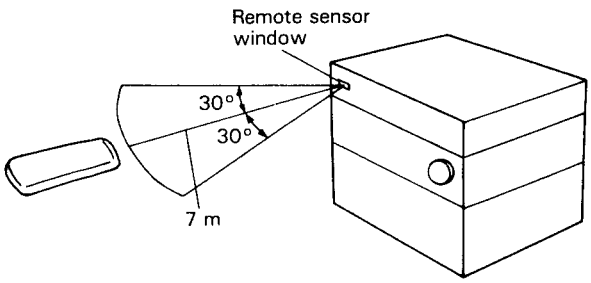

When the remote control unit is pointed at the remote sensor window on the tuner section and any of its buttons is pressed, the tuner and other components can be operated by remote control.
Distance: Within a range of approx. 7 meters (23 feet) from the remote sensor window.
Angle: Within approx. 30 degrees from the center of the remote sensor window.
Remote control will not be possible if there is an obstacle between the remote control unit itself and the remote sensor window.
Performance of the remote control unit is adversely affected in the presence of strong fluorescent light. Keep such lights away, especially from the sensor window.

8. SPECIFICATIONS

Cassette deck receiver: RX-Z15/RX-Z35/RX-Z45

Amplifier Section

[RX-Z15 U.S. and Canadian models]

Continuously Average Power Output is 16 Watts* per channel, min., at 8 ohms from 60 Hertz to 20,000 Hertz, with no more than 0.9 % total harmonic distortion.**

** Measured pursuant to the Federal Trade Commission's Trade Regulation rules on Power Output Claims for Amplifiers.*

[RX-Z15 Australian and Multi-voltage models]
Peak Music Power Output ..... 255 W/6 Ω
[RX-Z35 Australian and Multi-voltage models]
Peak Music Power Output ..... 330 W/6 Ω
[RX-Z45]
Continuous Power Output (DIN) ..... 20 W + 20 W (1 kHz, T.H.D. 1 %, 6 Ω)
Continuous Power Output (RMS) ..... 30 W + 30 W (1 kHz, T.H.D. 10 %, 6 Ω)
Graphic equalizer frequency band ..... 100 Hz, 330 Hz, 1 kHz, 3.3 kHz, 10 kHz, ±7 dB

Cassette Deck Section

Systems ..... 4 track, 2-channel stereo
Heads ..... Recording/playback head x 1
Playback head x 1
Erasing head x 1
Motor ..... DC servo 2 speed motor x 1
Wow and Flutter ..... No more than 0.3 % (WRMS)
Fast Winding Time ..... Approximately 105 seconds (C-60 tape)
Frequency Response (– 20 dB recording):
TYPE I (Normal) ..... 35 Hz to 14,000 Hz ±6 dB
Signal-to-Noise ratio
Dolby NR OFF ..... More than 50 dB
Noise Reduction Effect (only models featuring built-in Dolby NR)
Dolby B type NR ON ..... More than 10 dB (at 5 kHz)

FM Tuner Section

Frequency range ..... 87.5 MHz to 108 MHz
Usable Sensitivity ..... Mono: 14.2 dBf, IHF (1.4 μV/75 Ω)
Signal-to-Noise Ratio (IHF, 85 dBf Input) ..... Mono: 70 dB
Antenna Input ..... 75 Ω unbalanced
300 Ω balanced

AM Tuner Section

Frequency Range
With 10 kHz step ..... 530 kHz to 1,700 kHz
With 9 kHz step ..... 531 kHz to 1,602 kHz
Sensitivity (IHF, Loop antenna) ..... 385 μV/m
Antenna ..... Loop Antenna

Furnished Parts

Operating Instructions 1
Remote Control Unit 1
Dry Cell Batteries 2
FM Antenna 1
AM Loop Antenna 1

Miscellaneous

Power requirements
U.S. and Canadian models ..... AC 120 V, 60 Hz
European model ..... a.c. 230 Volts~, 50/60 Hz
Australian models ..... a.c. 240 Volts~, 50/60 Hz
Other destination models
..... AC 110/120–127/220/240 V (Switchable) 50/60 Hz
Power Consumption
RX-Z35/RX-Z45 ..... 200 W
RX-Z15
U.S. and Canadian models ..... 80 W
Other destination models ..... 175 W
Dimensions ..... 360 (W) x 272 (H) x 327 (D) mm
14-3/16 (W) x 10-11/16 (H) x 12-7/8 (D) in
Weight (without package) ..... 7 kg (15 lb 7 oz)

- *Specifications and design subject to possible modification without notice due to improvement.*

*** Measured By Audio Spectrum Analyzer.*

Dolby noise reduction manufactured under license from Dolby Laboratories Licensing Corporation.
"DOLBY" and the double-D symbol DD are trademarks of Dolby Laboratories Licensing Corporation.